CraftCan 15/35 User Guide Ver 1.3

2001 S.W. 6th St. Lincoln, NE 68522
402-475-BEER

American Beer Equipment 2001 SW 6th St.
Lincoln, NE 68522

Thank You!

Congratulations on purchasing your American Beer Equipment CraftCan system. The CraftCan is one of the most advanced medium-speed canning lines available. The employees of A.B.E. have worked very hard to bring you a machine which will provide many years of reliable operation with a minimum amount of maintenance.

Your CraftCan system has undergone a comprehensive quality assurance and inspection process prior to final packaging and shipment to you. Any residues you see on the surfaces of the CraftCan are a result of this testing process and are to be considered normal. Your beverage tubes may have CIP chemical residue in them from when they were cleaned before shipping.

Please read this entire manual prior to installing and operating your CraftCan System to ensure you understand the functions of the system. If you have any questions, please do not hesitate to contact:

American Beer Equipment

402-475-BEER (2337)

Thank you for your business! Now let's go can!

Contents

1. Safety Precautions

a. Please read the entire Operator's / Technical manual before starting the installation.
b. Improper installation, adjustment, alteration, service, maintenance or use can cause personal injury or property damage. Consult a qualified installer or service agency for information or assistance. The qualified installer or agency must use factory-authorized kits or accessories when servicing this product.
c. Follow all safety codes. Read these instructions thoroughly and follow all warnings. Consult local building codes and / or National Electrical Code (NEC) for special installation requirements.
d. This unit is equipped with an electrical panel. This panel should remain closed, except when being serviced by qualified individuals.
e. This unit is equipped with Polycarbonate guarding. Guarding should remain on the system when operated to prevent injury.
f. As there are high voltage connections inside the system, limit access to qualified personnel only.
g. This unit is under microprocessor control which can lead to unexpected movement of components. Always turn off the external power and disconnect air supply to the unit when servicing or inspecting the electrical controls, and other areas on the unit.
h. Do not place any part of your body inside of the CraftCan filler or seamer while the machine is running. Doing so may be harmful.

Warning
Before installing or servicing system, always turn off main power to system. There may be more than one (1) disconnect switch. Electrical Shock can cause personal injury or death.

a) Uncrating the CraftCan

a) Uncrate the CraftCan and inspect the system for shipping damage. If damage is discovered, contact your shipping carrier prior to start up. The system was thoroughly inspected prior to packaging. If damage to the system is found, it is the carrier's responsibility to correct the damage.
b) Inspect the system for any loose or disconnected wires, tubing or fittings. Tighten as required. It is not unusual for some fittings to loosen due to the vibration that occurs during shipment. It is our practice not to overtighten the fittings during the manufacturing process. We have found it better for the life of the fittings to tighten moderately at the factory rather than to overtighten.

b) System Placement

a) The system should be located so there is unrestricted access to all sides.
b) The system should be installed in a location and manner that will prevent damage to personnel, merchandise and/or the surrounding area in the event of an overflow, leak or discharge from the machine or connecting lines. We recommend locating the system close to a floor drain.
c) The system should be secure from unauthorized or untrained personnel.
d) The system must not be exposed to freezing temperatures.
e) Good manufacturing practices and adherence to local regulations for food and beverage operations should be followed.

2. Initial Startup Procedures

a. It is up to the purchaser to have a licensed electrician properly connect the CraftCan to power.
b. Once connected, the CraftCan can be powered by turning the red on/off handle to "I" on the electrical box
    i. The HMI will power to the ABE home screen
    ii. You can now familiarize yourself with the various screens
c. The main air can be connected to the back of the machine with a male 1/2" quick connect.
d. The CO2 pressure regulator at the machine for CO2 Pulse should be set at 60 PSI. Main line air pressure regulator should be set at 100 PSI and operates at 100 psi +/- 10 psi. The machine will stop if the pressure falls out of either range because ABE wants to make sure you have the best possible canning experience possible. Insufficient air demands will not allow for an optimal experience.

3. CIP Procedures

a. The CraftCan System has the ability for CIP. The tubing is rated for up to 165 degrees Fahrenheit. To start CIP, place cans below the nozzles, and hit "CIP" on the "Main" screen (Figure 1). The nozzle cylinder will extend and the nozzles will open. The CIP time duration can be altered as needed. It is in seconds.
    i. **NOTE**: If your nozzles extend downward, and then come right back up, please check that your CIP time has not yet reached zero. If it has, please enter a new CIP time value.
b. It is up to the brewery to ensure proper CIP procedures. Not performing proper CIP procedures may lead to an unsafe consumable. A typical CIP process may look similar to the following:
    i. Powdered Brewer's Wash
    ii. Flush canning lines with water
    iii. Caustic Acid # 5
    iv. Flush canning line out with water
    v. Saniclean (temp not as important)
        1. Can soak machine in SaniClean

4. Canning Procedures

a. Filling

i. Please follow the attached "Beer Pre-Start" and "Operator Setup Sheet" before canning each time (page 51).

ii. A summarized version of the above is as follows. Connect:

   a. ½" main air line at filler on backside
   b. ¼" C02 line at filler on backside
   c. 1-½" sanitary line (Beer)

iii. When you are ready to start canning, go to "Input & Outputs" on the HMI screen (Figure 1)

   a. Click "Enable Testing" (Must always be depressed first for any action to take place)
   b. Cycle "Can Push" and "Push to Seam" to make sure the cylinders are running smoothly. If they are not, see if beer has dried on the shafts. Hot water and FDA approved silicon spray will produce a smooth cylinder operation.
   c. Use the CIP button to cycle the Nozzles until beer exits, and there is minimal foam
   d. Make sure sanitizer or other chemicals have exited the system

iv. Next, go to the "Main" Screen

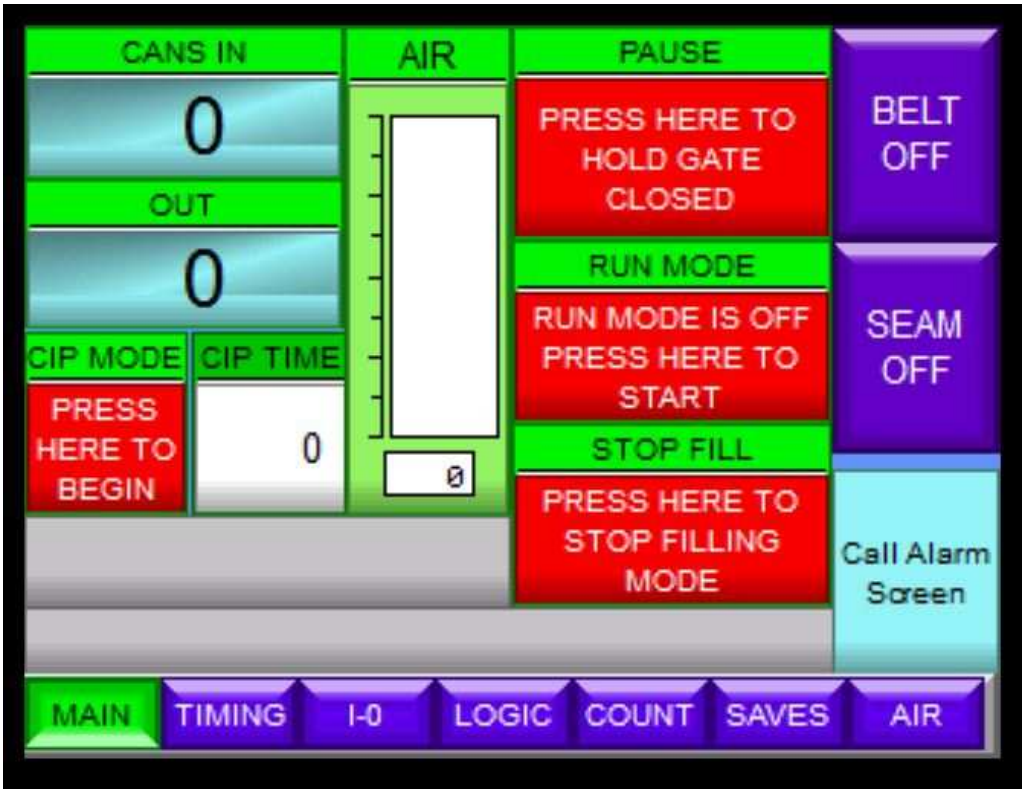

Figure 1. Main Screen

Depress:

a. PAUSE
b. BELT
c. SEAM
d. RUN-MODE (There is a 5 second delay after pressing run-mode)
e. PAUSE (To open Gate)
    i. When “Run Mode” is depressed, cans will begin the filling and seaming process.
    ii. A typical cycle occurs as follows:
        1. Inlet gate opens
        2. Cans are counted in (displayed on Main Screen, Figure 1)
        3. Once “Cans Per Fill Cycle” equals “Cans In”, in-let gate closes
        4. Fill nozzles with probes come down into can
        5. The Co2 purge cycle turns on with a time duration equal to the time setting “Purge on Time”
        6. Once “Purge on Time” has completed, the fill cycle will start and finish filling once the probe debounce time and extend fill time has been exceeded. Once the probe debounce has been exceeded, the nozzles will start to rise out of the can and also the nozzles will go into extend fill mode.
            iii. **NOTE**: The air pressure must be above the minimum value specified to operate your machine. The air pressure monitor, on your front panel, Figure 1, displays this value. If your pressure drops below the minimum, your machine will stop filling and seaming. The integrity of your seams may be compromised if the pressure drops below the recommended. Your machine will wait for your compressor to catch up before canning may resume.
            iv. **Note**: The “PAUSE” button is on the main screen to prevent cans from entering the filler. You may press this button at any time to prevent more cans from entering the filler
            v. **Note**: You may also prevent can movement, at any time, by pressing the “CONVEYOR” button.
        B. Your machine comes fully tested with reliable time settings. If you wish, you may alter the time settings. There is a security code to do so.
            a. Note: Altering time settings can negatively affect your canning line performance if the value deviates from the setting provided to you from the factory.
        C. The CraftCan has the ability to change fill times on the fly. To do so, you may increase or decrease your fill levels by going to the Timing Screen and hitting the “All Fill Extend” button (Figure 3. Individual Nozzle Tunings). This will allow you to numerically increase or decrease the amount of product which enters the can.
        D. Adjustment of the probe debounce time and nozzle offset (Figure 3).
            a. Probe debounce will control how long the probe must sense beer before the nozzle starts rising out of the can and the extend fill time starts. If the time setting is too low, the nozzle will rise out too quickly before the can is full (a

bubble could set the probe off). If the nozzle time is too long, the nozzle will remain open for longer than needed and stay in the can.

b. Nozzle offset compensates for nozzles which fill faster or slower than the average nozzle. If an individual nozzle is too quick or slow, alter the nozzle's time setting accordingly.

E. $C0_2$ Pulse can be turned off or on via the time setting screen.

a. Typically, a small jet (around .020 seconds) provides the correct amount of extra CO_2, 3/4th of the way up the can to promote an extra layer of foam. This foam will allow lids to lie atop the foamy head and prevent dissolved oxygen pickup (DO_2).

Figure 2. Time Settings Screen on HMI

Figure 3. Individual Nozzle Tunings

b. Seaming

It is up to the brewery, and employees, to determine what a proper seam is and to maintain the seam on every can. Without a proper seam a can may leak. Therefore, making sure the can seam falls within the manufacturer's double seam specifications is of utmost importance. Follow the procedures below to make sure your can is in spec after installing a new roller operation die. If your seams were previously in spec, but are now on the outside range, please refer to the Double Seam Setup Procedures.

Proper maintenance of your rollers will prolong repeatable and accurate seaming. Please refer to the Maintenance Section for more information.

a. Double Seam Setup Procedures

1. **Ensure pin gauge height** (Figure 6)
    a. Distance between top of lift table puck when cylinder is extended and seaming chuck, corresponds to your double seam guide (from can end manufacturer)
    b. Adjust height using adjustment knob in Figure 7.
        i. Turning the knob clockwise limits the stroke of the cylinder (increases pin height).
        ii. Please have the cover on the back of the cylinder when running the line.
2. **Elevate roller lips**
    a. operation 1 & operation 2, clear above chuck lip (see Figure 4) to avoid chuck from crashing into, and damaging, the roll
3. **Bring 1st Op Roller in to chuck** (Input/Output Screen-Figure 31) TIP: Use a piece of white paper as a background
    a. Adjust the stroke of the connected seaming cylinder Figure 9. Chuck and until it is 0.003”-0.005” away from the chuck (x1 on Figure 4).
4. **Rotate 1st Op roller down**, manually with hand, until it touches chuck lip
    a. back off 1/8 turn (aprx .003” on Figure 4).
5. **Bring 2nd Op roller in to chuck** (Input/Output Screen- Figure 31)
    a. Adjust the stroke of the connected seaming cylinder until it is 0.003”-0.005” away from the chuck (X_1 on Figure 4).
6. **Rotate 2nd Op roller down**, manually with hand, until it touches chuck lip
    a. back off 1/4 turn (aprx .009” - .015”,Figure 4).
7. **Check 1st Op roller width**
    a. In Input/Output screen, select Roller 1, then select “test”
    b. Use your specific can double seam guide
    c. If width is too small, move roller away from seaming chuck (Figure 9).
8. **Check for deadhead on first operation**
    a. Did can stop spinning?
        i. Adjust flow control (decrease flow) closest to seamer cylinder rod
9. **Check 2nd Op width/height**
    a. In Input/Output screen, select both Roller 1 & 2, then select “test”
    b. Check for tightness/wrinkles
10. **Check for deadhead on 2nd Op**
    a. Adjust flow control (decrease flow) closest to seamer cylinder rod
11. **Check body/cover hook**
    a. 2nd Op Seam Thickness
    b. 2nd Op Seam Height
    c. Body Hook
    d. Cover Hook
12. **Check tightness rating**
    a. Needs to be 90% or greater (See figure 5)

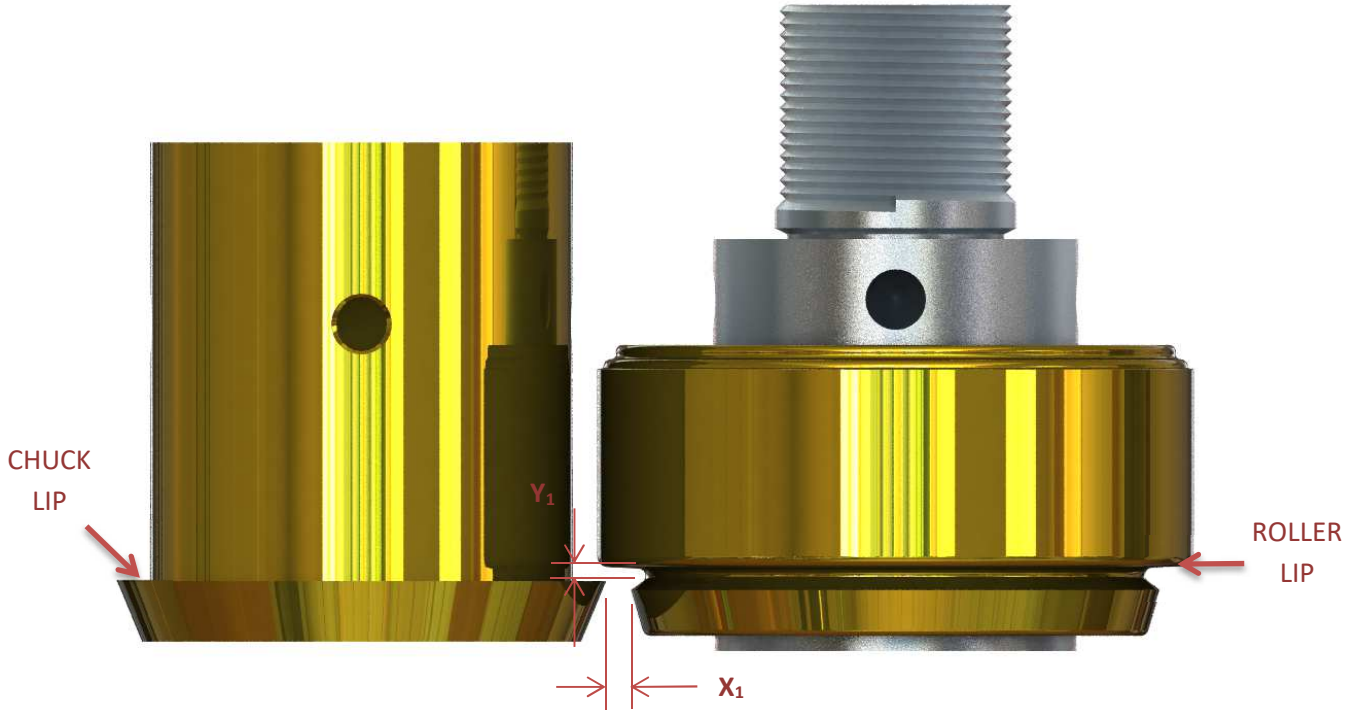

Figure 4. Roller & Chuck

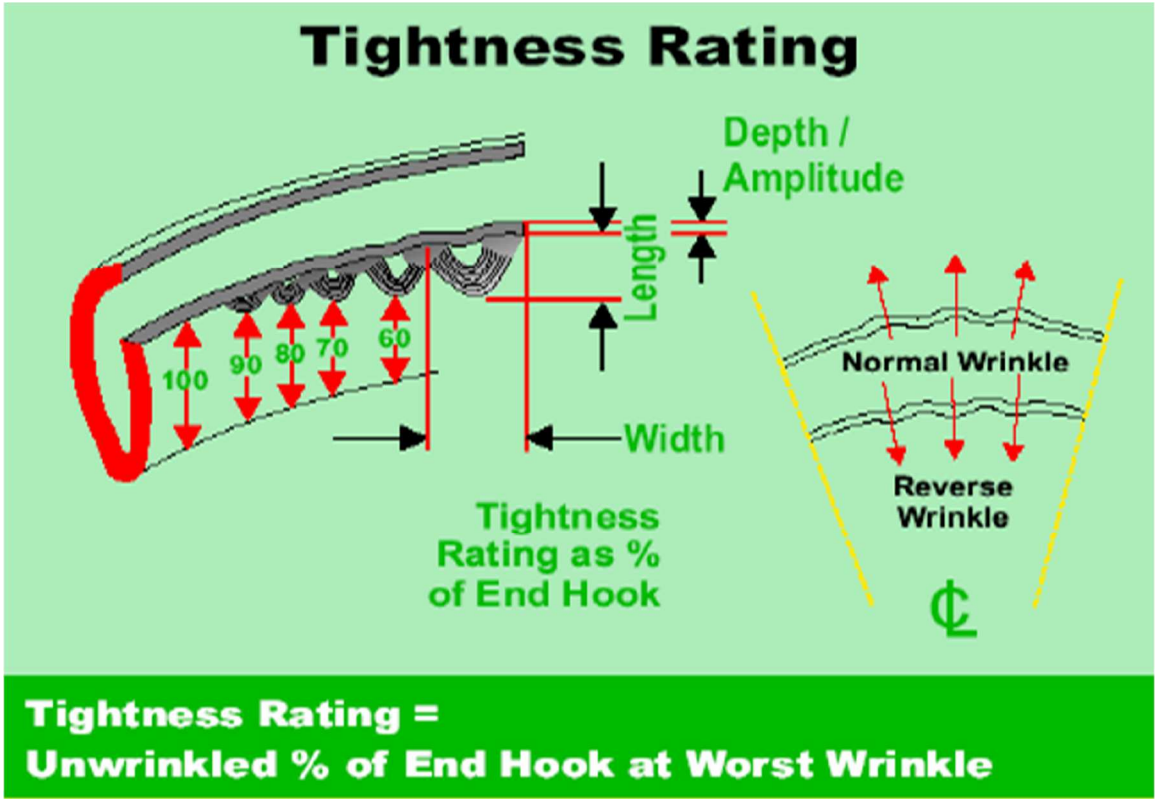

Figure 5. Tightness Rating (Provided by Crown Cork and Seal)

Seamer Puck Information

Two seaming pucks are included with your machine. Typically, one of the two pucks will fit the bottom of your can profile. The can bottom should rest fully onto the puck with minimal "slop". If the can does not rest fully onto the puck, the other puck should be swapped out and tested. Please contact ABE Customer Service for further help if needed.

d. Seaming Adjustment Guide

Characteristic	Reason A	Reason B	Reason C
Long Seam Height	Die #1 set too far from chuck	Die #2 set too close to chuck	
Long Body Hook	Lift table high/Pressure high	Die #1 too far from chuck	
Long Cover Hook	Die #1 too close to chuck		
Short Body Hook	Lift table low/Pressure low	Die #1 too close to chuck	Die #2 too far from chuck
Short Cover Hook	Lift table too high	Die #1 too far from chuck	

A more comprehensive table, provided by Ball Beverage, can be found in Figure 28.

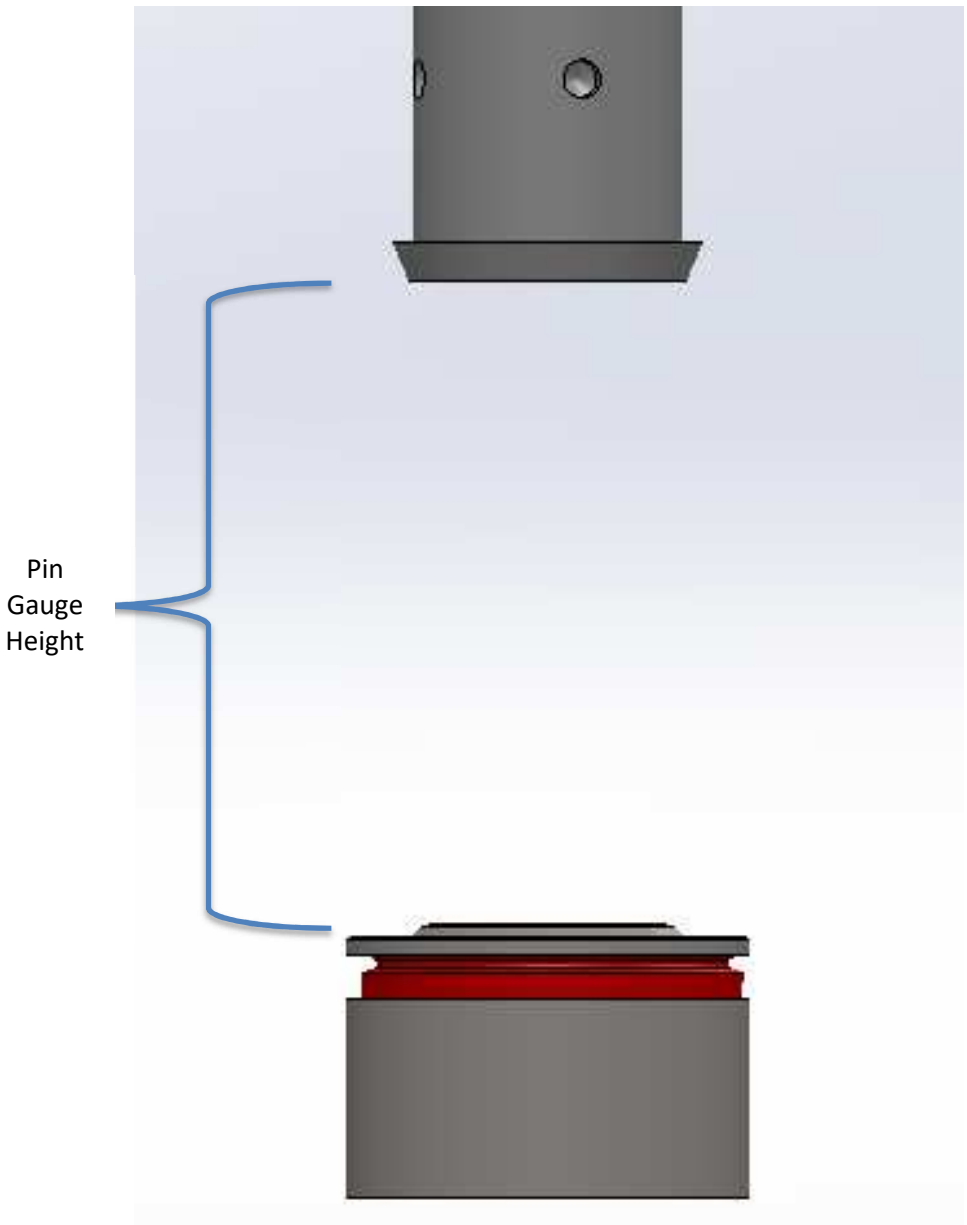

Figure 6. Pin Gauge Height

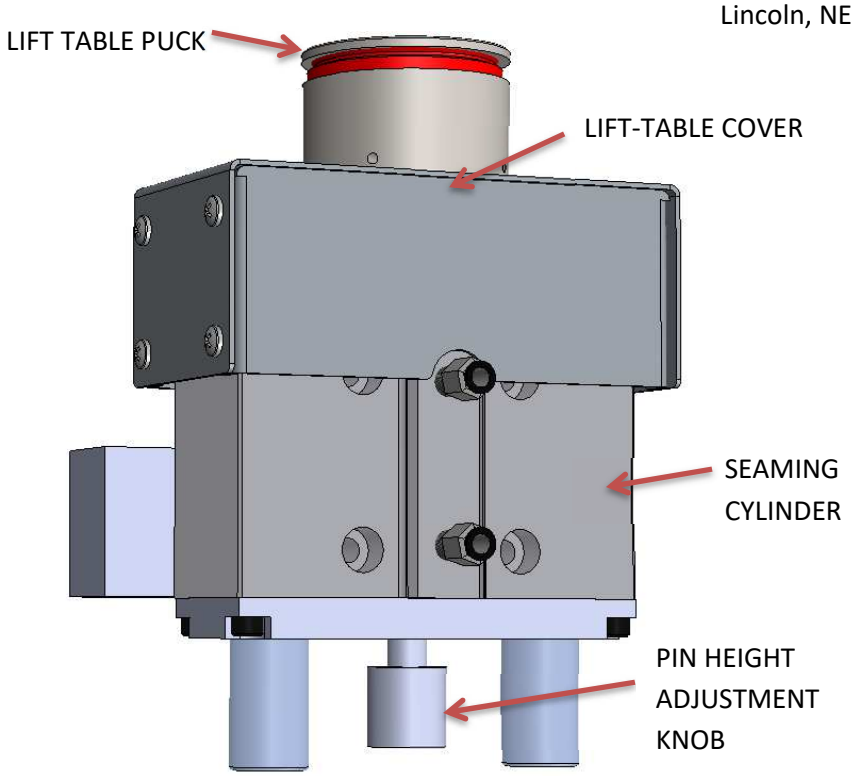

Figure 7- Lift Table Assembly. The lift-table puck height (pin gauge height) can be adjusted by loosening or tightening the adjustment knob.

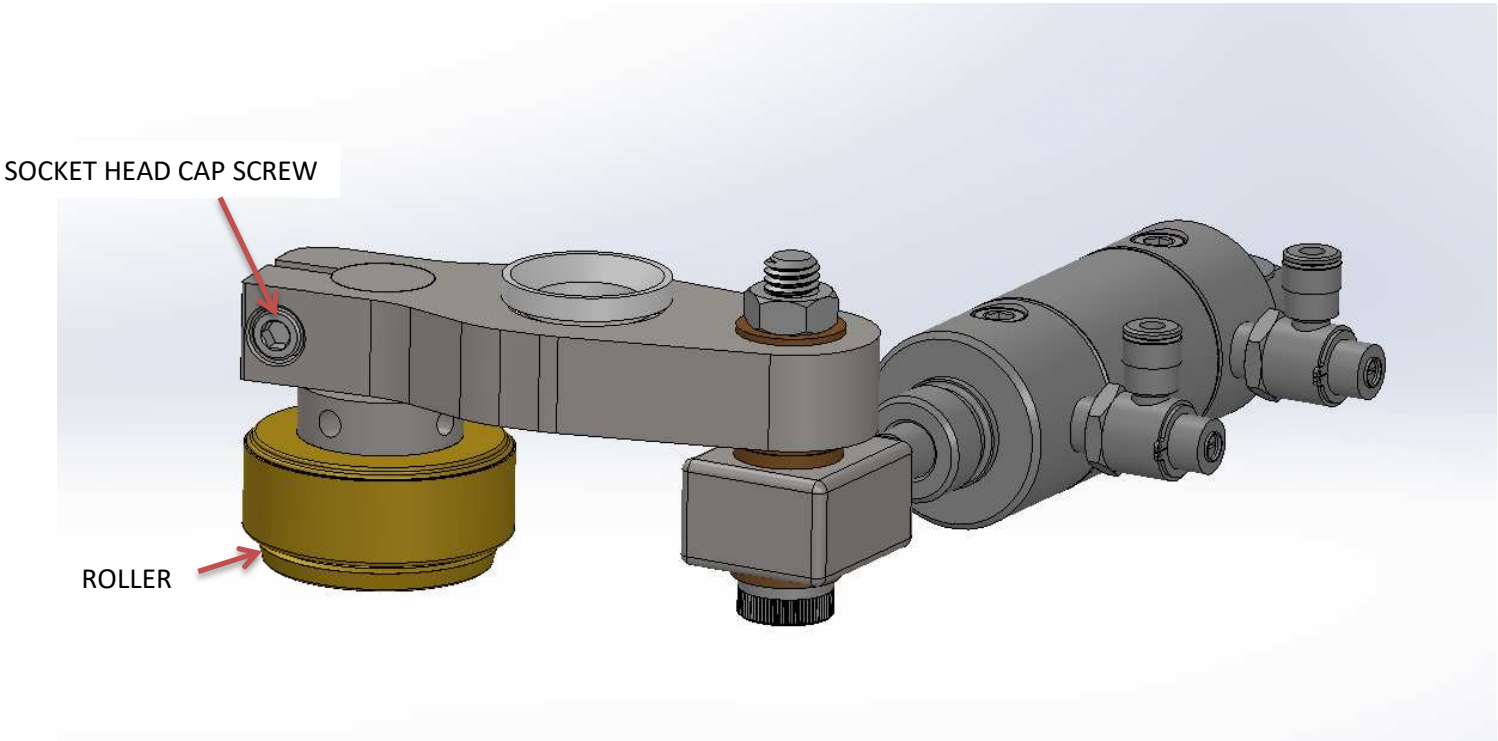

Figure 8- Roller Assembly. Roller height can be adjusted by loosening the socket head cap screw and turning the roller assembly in or out. The roller's position can be fixed by tightening the socket head cap screw to 14.5 ft*lbs.

Notes:

1. Pin height should be set to manage a proper body hook. Refer to your double seam guide for the proper height (provided by the can manufacturer).
2. Variance should not be more than .003”
3. Grooved lifer plate should be .010” lower than specification
4. Do not over-grease rollers
    a. Over-greasing may lead to deadhead
    b. Use Kluber nh1 14-261 grease or similar “0” grade
5. Take 3 seam measurements 120 degrees apart
6. Adjustments not needed unless consistently out of range specs

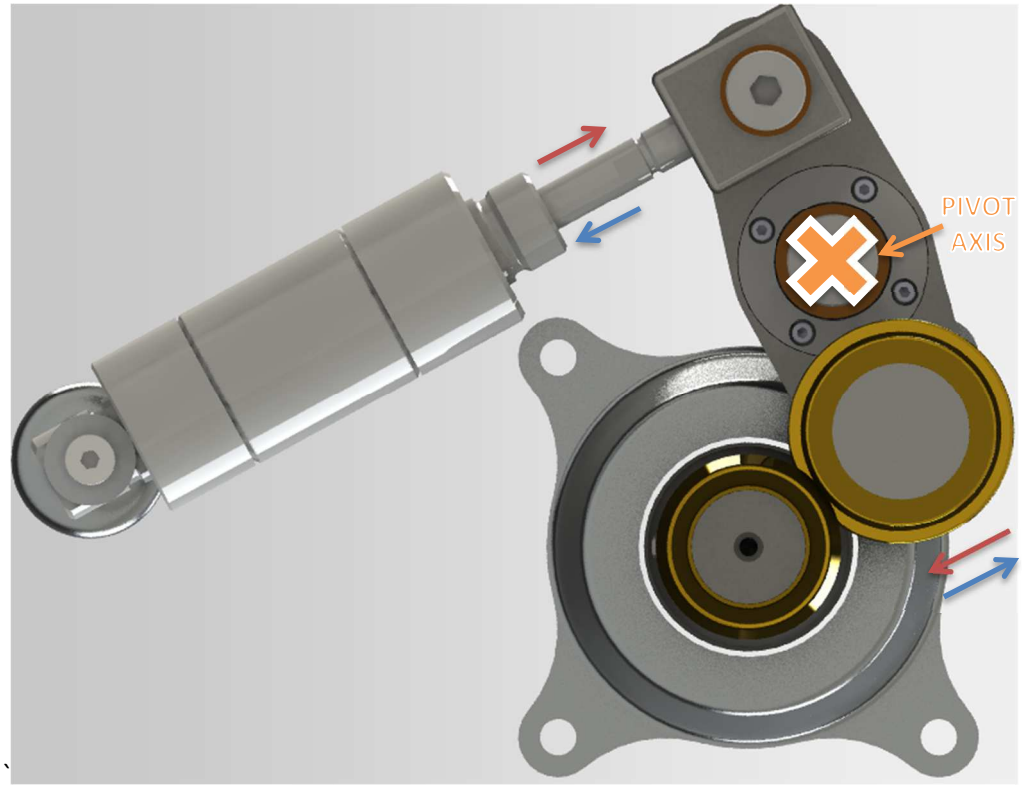

Figure 9. Chuck and roller assembly. Extending cylinder (red arrow) will extend the roller into the chuck. You may thread the cylinder shaft into the female block to get a shorter cylinder stroke and bigger gap between chuck and roller.

5. Cleaning

a. If the canning line will not be run for longer than 5 minutes, low pressure hot water must be used to rinse off all beer from the machine. Failure to rinse off any beer will result in poor machine performance and ultimately a poor finished product. Beer is very sticky and will keep the cylinders from smoothly operating. Keeping cylinders clean will prolong the life of the machine
b. With exception to the electrical box in the rear of the machine and valve manifolds, the CraftCan system is designed for filling applications where systems are routinely exposed to gentle wash down, certain chemicals, moisture, and humidity. It is important to understand the areas on or around the electrical box, or its components, should not be exposed to liquids such as beer and water. Similarly, valve manifolds should not have direct exposure to liquids such as beer and water. Every effort must be made to avoid spraying of liquid in the electrical box vents or near any of the valve manifolds. Failure to adhere to these restrictions may negatively affect components and hinder the performance of your CraftCan system.
c. **Without continuous cleaning, your system will stop functioning properly**. Please continue to clean all areas where beer rests. You can use a low pressure hot water in all areas except for the electrical cabinet on the backside of the machine and the air manifolds.
d. After the cylinders have been cleaned with warm water and air dried, test the cylinders to see if they operated smoothly. If they do not, spray an FDA approved silicon grease on the shafts.
e. Rinse off the conveyor belt with warm water.
f. Clean bottom lid pick area of lid chute. Make sure it is free of sticky beer. Lube when done.

6. Dissolved Oxygen

Dissolved oxygen (dO2) must be tested before, during, and after every run. It is highly recommended to first check the brite tank dO2 level, and then to check seamed cans during and after the packaging session for dissolved oxygen. This must be done on ever canning run to ensure proper operation and good manufacturing practices. It is not uncommon for an ABE canning line to produce seamed products under 100ppb or 50ppb while adding 10-15 ppb of oxygen above what level is provided to the line from the brite tank. Therefore, it is also important the brite tank oxygen level be as low as possible. Acceptable craft beer dO2 levels are attainable with proper maintenance to the ABE machine, proper brewing practices, and tight connections from the brite tank and throughout the canning line.

Higher than preferred dissolved oxygen levels are typically attributed to a loose fitting which has beer passing through it. If a fitting is not tight, oxygen may enter the system and higher than preferred dissolved oxygen levels may result. Furthermore, there cannot be oxygen in the headspace of the can. The headspace must be filled with CO2. The headspace should not be filled with product as this overfills the can.

Consult your specific dissolved oxygen meter for specific uses. Always check the brite tank first and then the can's total dissolved oxygen level.

Troubleshooting

a. Ensure brite tank dO2 level is acceptably low before checking the canning line dO2 levels.
b. Check all connections (tri-clamps, push to connect fittings, etc.) are properly tightened between the brite tank and fill nozzles.
c. Is one specific nozzle producing a higher dO2 level than another?
    a. If so, check for loose fittings
d. Is there sufficient foam atop the product so no area for air is able to be trapped?
    a. See section Filling for foam troublehshooting.
e. Is the undergassing co2 turned on at the lid chute and in the lid-chute tunnel?

Consult ABE if your levels are higher than acceptable.

7. Tips

a. Filling

a.Too Much Foam

b. Initially your beer may be foamy at the start of the run. This is typically due to the system being warmer than the recommended 32°-34° temperatures. Periodically cycling the nozzles, to cool them down, will help rid the system of foam (CIP button).
c. It may be beneficial to run cold liquid through the system to promote cooling of the system before your product is put through the filler for canning. This will allow for less of your product to be wasted.
c. In extreme cases, it may be beneficial to rotate your beer manifold, Figure 11, so beer is evenly distributed and air pockets don't "hide" in the manifold.
d. If your brite hose, between the brite tank and canning line, is relatively long, "burping" the line by walking foam out of the line from the brite to the canning line may also help to remove any foam pockets.
e. After the CraftCan has reached a stable temperature, and is no longer warm, the fill times should remain consistent. If inconsistent fill levels are seen, please check the brite tank head pressure. If the brite pressure fluctuates, so too will your fill levels. (Please contact ABE if you would like to get information on the Watch Dog unit which monitors your brite pressure and adjusts accordingly to provide a consistent brite pressure.)
f. During startup, you may benefit from increasing your fill times until beer exits the can. After you are sure the can is getting filled with beer, and not foam, you can decrease your fill times.
g. You may also increase the nozzle down delay, on the Time Settings Screen, to allow for your nozzles to dispense beer below the layer of foam in the can.
h. Also, an ideal brite tank pressure is between 14-16 psi. This typically produces beer with reduced foam levels.

i. Too Little Foam

a. Turn on CO_2 Pulse
b. Increase CO_2 pulse flow control (turn counterclockwise)
c. Increase brite tank pressure
d. Increase beer temperature
e. Decrease how quickly the beer nozzle closes (flow control)

i. Seaming

i. Make sure the roller heights are correct before checking the first operation seam specification. Without a correct "foundation", the rest of the seam will likely not be correct.
ii. Just because the second operation dimensions are correct, does not mean the cover hook and body hook are correct. **It is the responsibility of the customer to ensure proper seams as specified by the lid manufacturer.**
iii. Please view a very thorough video on seaming from Crown: *DBL Seamer Training* (https://www.youtube.com/watch?v=WGyb-wknUSY)
    A. If you watch the above, you will have a very high understanding of the entire seaming process.
    B. Seaming is not a scary process if a few minutes are taken to learn how it works.

8. Maintenance

a. Seamer

i. Roller bearing grease

Your roller operation bearings come greased with between 5 to 8 grams. Grade 0 or grade 1 FDA approved grease should be applied to the roller bearings periodically thereafter. The interval depends on usage, of your machine. Your rollers may require grease after as little as 144 hours. However, excessive lubrication may lead to dead heads or grease being thrown onto cans. Therefore, do not grease unless it is necessary as this can also decrease the life of your rolls. When done properly, grease should just exit the roller.

ii. Cylinders

1. Make sure to keep all cylinders free of sticky beer residue and lubricated with an FDA approved silicon grease. The shuttle cylinder, which shuttles cans into the seamer, and the lid tap cylinder should especially be considered.
2. Check shuttle cylinder cylinder which provides cans into seamer. Replace after 2 million cans per seamer if needed. (4 million cans for two seamers). Change out requires approximately 45 minutes.
3. Check 1-3/4" bore seamer cylinders. Replace after 20 million cans per seamer if needed. Changeout takes approximately 15 minutes.
4. Check filler cylinder. Replace after 28 million cans if needed. Changeout takes approximately 30 minutes.
5. Check lower seamer cylinder. Replace after 10 million cans if needed. Changeout takes approximately 45 minutes.

iii. Bearings

1. Check lower seamer bearings- Replace after 800,000 cans per seamer if needed. Approximately 10 minutes or less to changeout.
2. Check upper seamer bearings. Replace after 77.5 million cans per seamer if needed. Approximately 30 minutes to changeout.

b. Filler

1. Make sure probes are not bent and at same height relation
2. Probes are cleaned while CIP mode runs.
3. Make sure Co2 tubes are not bent

c. Other

1. Check conveyor sprocket and teeth for wear and tear monthly.

9. Troubleshooting

a) Filler

i. Fill Times

The beer will gradually rise to the top of the can and eventually close the circuit with the probe. When the probe circuit closes the nozzle will begin to rise out of the can after the debounce time has finished.

You want to make sure the beer nozzle does not fill outside of the can. This can cause high dissolved oxygen in the can. In order to get this time setting in place, you need to adjust nozzle probe debounce and extend fill, so that the nozzle starts to rise out of the can, with the beer shutting off when the nozzle is about ½ to ¾ out of the can. This will provide the least amount of displacement and ensure you are getting a full can of beer. You can also adjust the height of the probe by loosening the set screw in the nozzle body and moving the probe up.

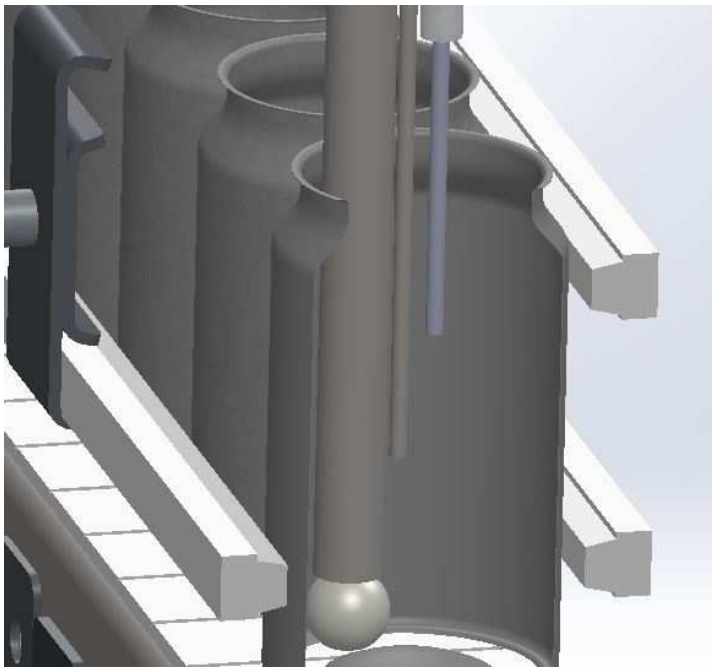

Figure 10. Filler Nozzle and Probe Assembly Cross-Section

ii. Beer Lines

Figure 11 Beer Manifold

If your lines are leaking beer, cut them back about an inch or two. You must cut squarely. The lines may change size, in the push-to-connect fittings due to the repeated thermal expansion and retraction from cold beer and hot cleaning cycles. The tubing is rated for up to 165 degrees Fahrenheit

Note: It is recommended to leave the beer lines pointing up on the welded frame bracket behind the HMI. This allows for the manifold to evenly distribute beer as well, prevents the manifold from getting kicked, and keeps it off the ground.

iii. Nozzle Leaks

Filler nozzles should not leak. Areas for leaking could be near the packing plug nut, filler ball, or tube connections. All areas of leaking are able to be adjusted and fixed.

If the packing plug nut leaks, you may gently tighten it (refer to figure Figure 12). Usually a ¼ turn will fix any leaking.

If the ball is leaking, several areas can be checked. Is something obstructing the ball from closing? Is the ball getting retracted while in the center of the nozzle tube? The most probable cause may be the ball has worn itself into the stainless tube a bit and the cylinder needs to retract the ball up into the nozzle body a bit more. This will ensure a tighter seal between the nozzle body and ball. There are two threaded areas, Figure 12, which have adjustment in the form of threads- coupling and rod. Either section can provide a tighter seal. In short, what needs to happen is the distance between the ball and cylinder must become shorter. To do this, the rod can be threaded into the coupling, or the coupling can be threaded into the cylinder. For example, to decrease the rod thread, the rod jam nut would be loosened. Then, the rod would be threaded into the coupling. Typically, an allen wrench is inserted into the ball and tightened while keeping the coupling stationary. After the rod thread is threaded into the coupling, the rod thread jam nut must be tightened. Loctite must be used on the threads to ensure the threads do not loosen and thus the need for the process to happen again.

Tightening the coupling to cylinder interface is much the same as the previous example. The accompanying jam nut thread would be loosened, the coupling would be threaded into the cylinder, and then the locktighted jam nut would be tightened.

Figure 12 Seamer Nozzle Close-up

If any fitting is leaking, the likely fix is to cut the tubing back an inch or two. Over time, the tubing may change its shape (decrease in size).

b) Seamer

i. Wrinkling

If wrinkling of the can body is occurring while in the seamer, check the pin gauge height the can-lift supply pressure can also be adjusted. If wrinkling occurs, the pressure is likely too high or the pin gauge height is too short (the pin gauge distance needs to be increased by moving the puck down).

ii. Shuttle to Seamer

If your seamer shuttle cylinder is not responding correctly, make sure a lid is not interfering with the sensor. A lid can false trigger the sensor.

Also make sure water or beer is not on the lens. The sensor will light up, and display a value higher than 120, when it is activated (when a lid is present).

c) Lid-Escapement

If too many lids come out of the chute, check the stainless rod beneath the spring steel clips. Make sure the rod sits in the channel. The rod should not be riding out of the channel.

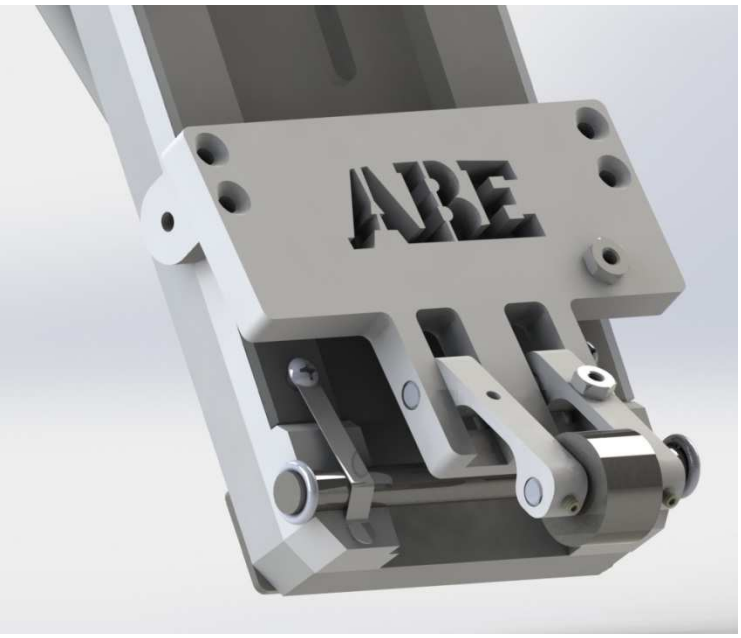

Figure 13. Lid-Escapement Close-up

If lids are not being picked properly, make sure the lid-chute is centered above the can. Also make sure the lid is positioned properly above the can- the can needs to be centered between the lid's "pocket" as shown in Figure 13. Make sure this area is clean and free of sticky beer. Clean and lube before each run. Precise adjustments can be made by adjusting the wedge rod in Figure 15.

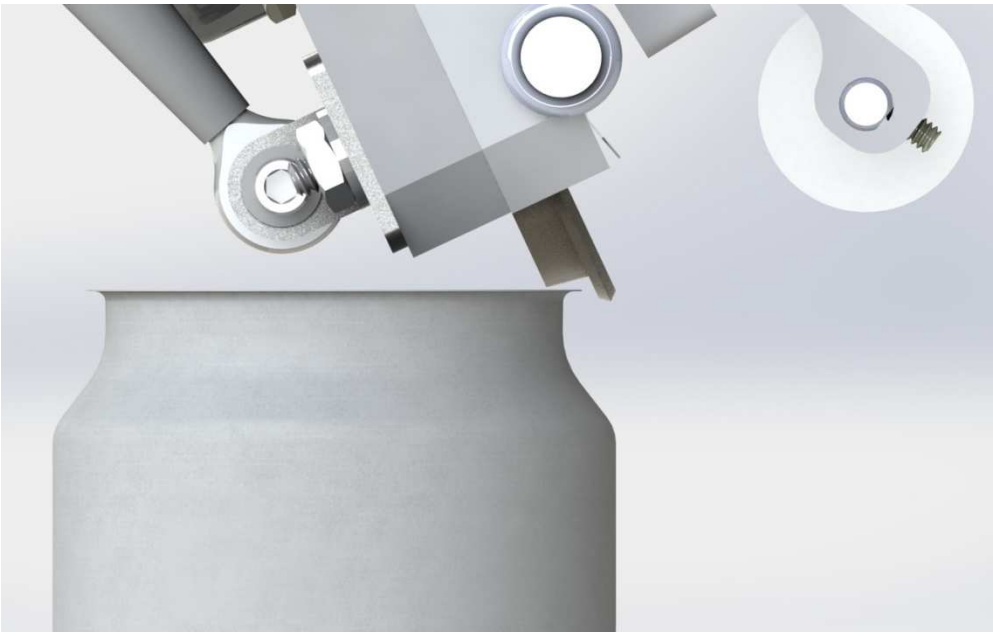

Figure 14. Proper Can and Lid Alignment

Figure 15. Lid-Escapement Adjustment

d) Lid-Tap

If the cylinder touches the lid during your manual testing, but not during a canning run, make sure your flow controls are not slowing down the cylinder and thus preventing it from quickly tapping the can. However, if you open them up too much, you may dent the lid or alter the can's top edge.

Caution: Exceeding 60 psi may result in damage to the lid tap cylinder and will not be covered by warranty

e) Other

a. Exahusting flow controls are used on many cylinders.
    a. Increasing flow (turning counterclockwise) will increase the flow exiting from the cylinder port.
    b. Decreasing flow (turning clockwise) will decrease the amount of flow exiting the cylinder.

f). Mac Valves Manifold Videos

g). E-Stop

a. If nothing turns on or "works", please check the E-Stop button has not been depressed. The E-Stop must be reset by twisting it out of its depressed state many times.

Figure 16. Emergency Stop

h). Air Pressure monitor

a. If air pressure drops below minimum pressure value, run mode will deactivate. It is wise to keep this minimum no less than 90psi, as the seam of the can relies on the system pressure being above 90.

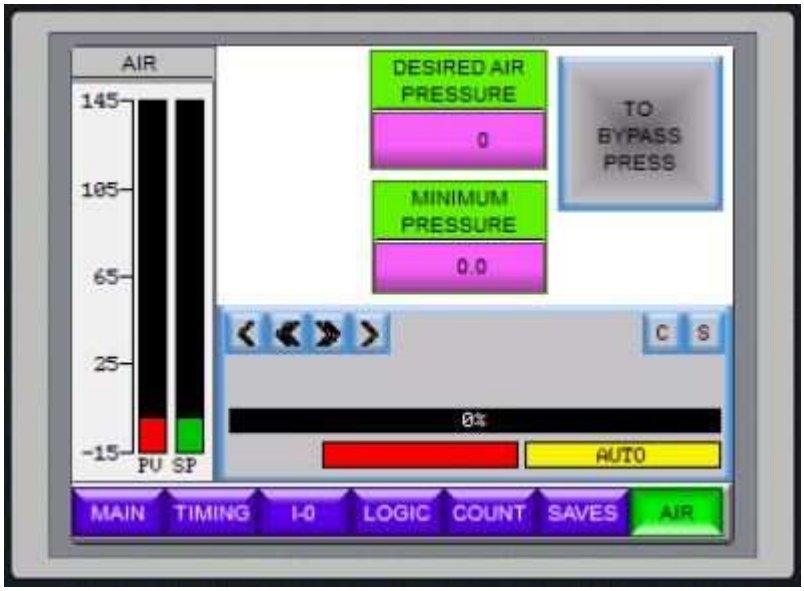

Figure 17. Air Pressure Screen

10. Height Changeover

Your machine already comes with the ability to change from 12 oz cans to 16 oz cans and vice-versa. The main changes required include adjusting the height of the:

1. nozzle cylinder height
2. lid-escapement height
3. lid-skimmer height
4. seamer

All of these changes are height based as long as the can diameter, 202/211, remains the same. If you change to a larger or smaller diameter, other changes may be required. Your machine can also fill and seam 24 oz cans. Several other modifications may be required. Please contact ABE for more information.

a. Nozzle Cylinder Height

There is a sensor at the top of the cylinder's stroke, as well as the bottom. When adjusting for different height cans, typically only the top sensor is adjusted. Therefore, the top sensor needs to light up at the end of the cylinder's stroke. The sensor uses an allen-key to loosen and fasten in the cylinder's translating slot. The sensors are shown below. NOTE: Do not over tighten these sensors.

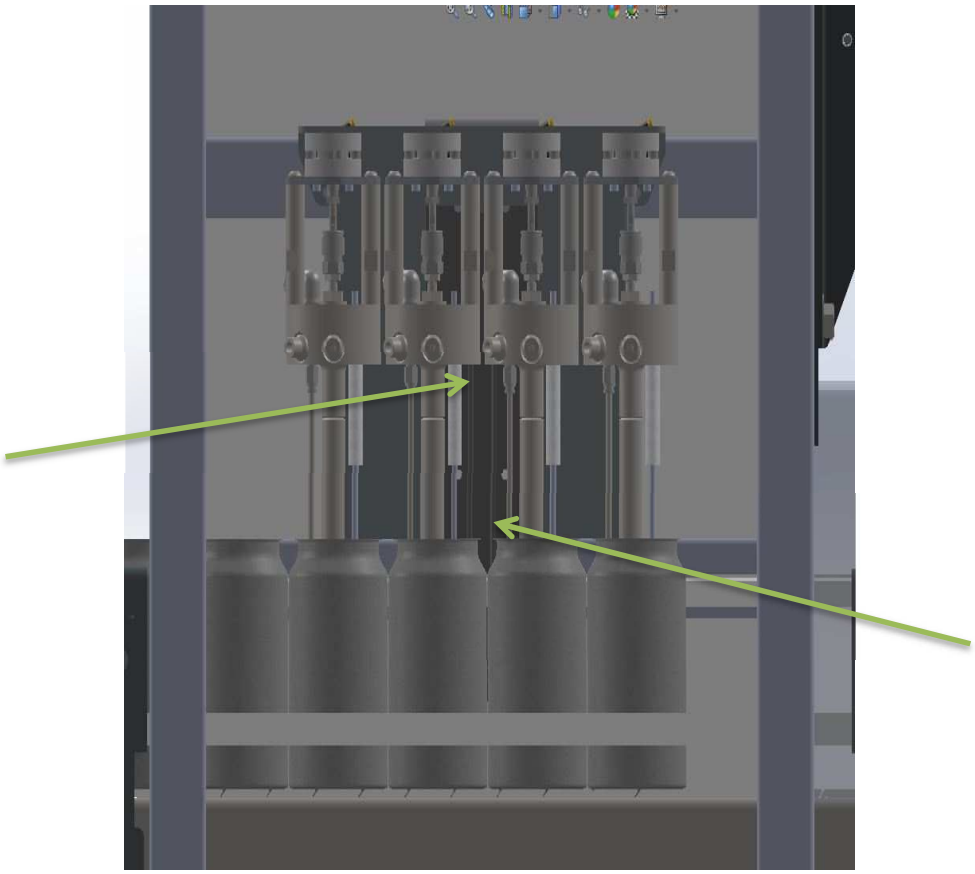

Figure 18. Position sensors on nozzle cylinder

b. Lid-Escapement Height

Four bolts adjust the height of the lid escapement. Fine tuning of the height can be done with the wedge-rod in Figure 5. The wedge must be adjusted so that the can fits perfectly in the pocket of the lid as shown. The wedge makes the adjustment process very convenient. Just loosen the jam nut at the top, twist the wedge, and then tighten back down the nut. If the lids are too low, the cans will likely run into the lids and too many lids will fall out at a time. If the lid-chute is too high, no lids will be picks.

Figure 19. Lid-Escapement showing 4 bolts for adjustment

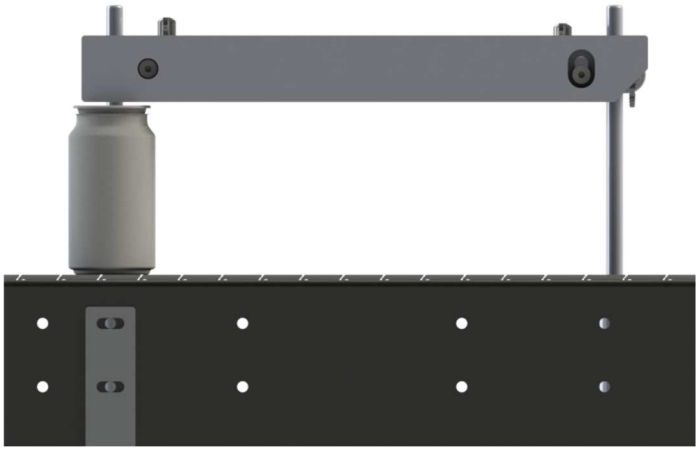

Figure 20 Lid Skimmer Assembly

The lid skimmer needs to sit just above the height of a full can. If foam is present, the front of the skimmer needs to just sit above the foamy lid.

The end of the skimmer should remain lower than the front of the skimmer. The end translates up and down while the front of the skimmer pivots. The end should be slightly lower than the height of a seamed can.

Adjustments for the height can be made using the adjustment knobs behind the black UHMW skimmer.

c. Seamer (s)

Seamer height adjustment is done by inserting, or taking out an adapter, machined to the correct difference between the can sizes (Figure 21).

After the heights are changed, you must ensure, using your specific double seam guide, the cans are in spec. Refer to Double Seam Setup Procedures for more information.

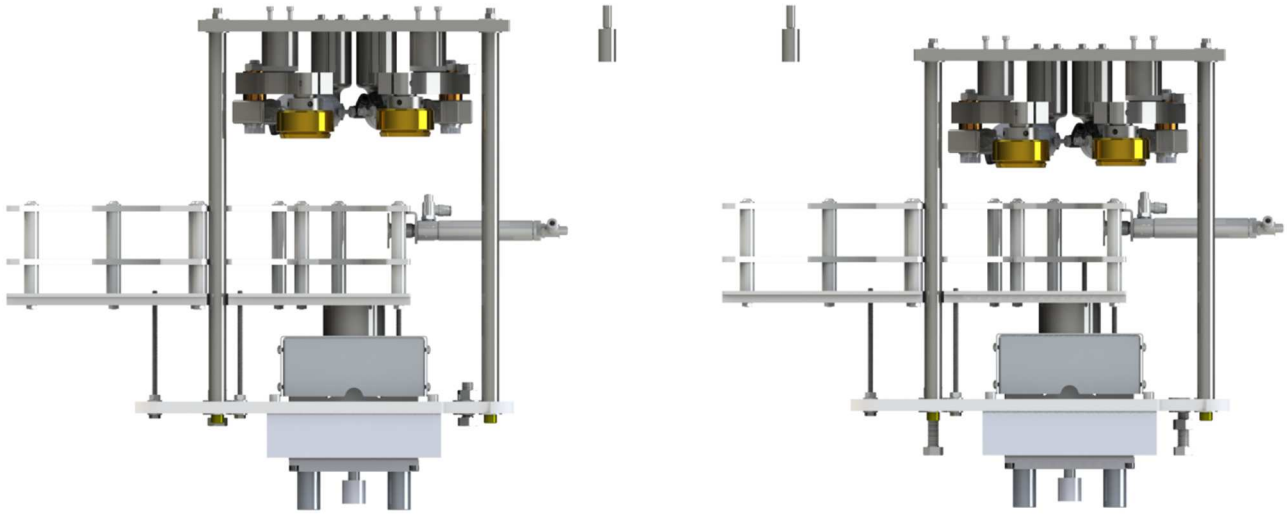

Figure 21. Seamer height difference between a 12 oz can (right) and 16 oz can (left) with the adapters shown in the middle.

11. SAVED SETUP (RECIPES)

Figure 42 Saved Setup Screen

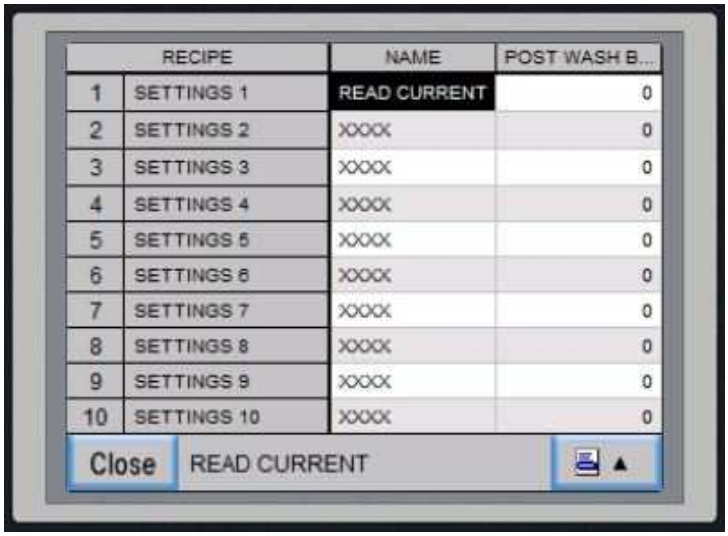

	RECIPE	NAME	POST WASH B...
1	SETTINGS 1	READ CURRENT	0
2	SETTINGS 2	XXXX	0
3	SETTINGS 3	XXXX	0
4	SETTINGS 4	XXXX	0
5	SETTINGS 5	XXXX	0
6	SETTINGS 6	XXXX	0
7	SETTINGS 7	XXXX	0
8	SETTINGS 8	XXXX	0
9	SETTINGS 9	XXXX	0
10	SETTINGS 10	XXXX	0

Close READ CURRENT

Figure 23 Main Timing Saves Screen

Figure 24 Main Timing Saves Screen with Second Row Selected

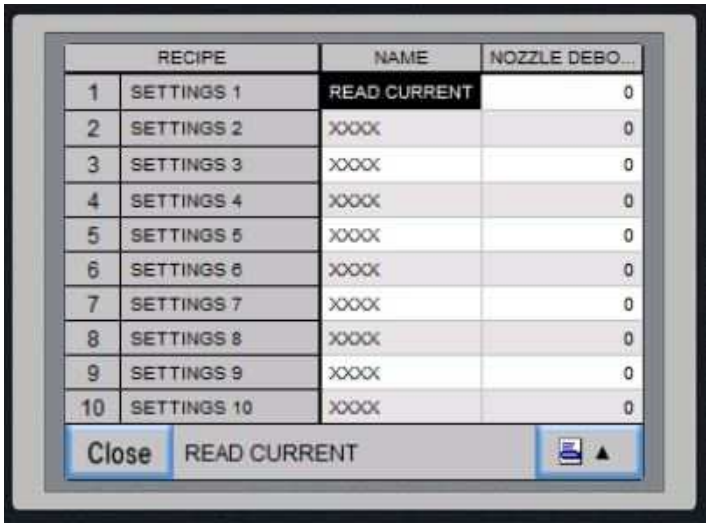

Figure 25 Main Time Saving Screen Asking to Read from PLC

Different time setting profiles, or recipes, can be saved on the CraftCan system. This is valuable for different beers or cans. Once you like a specific profile, you can go back to it.

Saved setup screen

Pressing “Main Timing Saves” button brings up spreadsheet screen.

Select left column number to highlight entire row

Edit button will be black. Select edit button and it turns white and “read PLC” Button becomes live.

Select read PLC button and you will be asked “Read Data from PLC and Overwrite Selected Row?”

Choose “OK” to proceed.

All current data is saved in the selected row.

On closing, you can choose to save.

12. Appendix

a. Time Settings

Figure 26 Time Setup HMI Screen

1. ALL FILL EXT - How long all nozzle extend fill past probe debounce time
2. CO2 PULSE
   On or off for CO2 pulse
3. PULSE ON
   CO2 pulse on time
4. PULSE DLY
   CO2 pulse delay from when beer starts flowing
5. CCS DELAY
   Conveyor Clearance Sensor (For feedtable)
6. CANS #
   Number of fill heads active
7. LID TAP ON TIME

Lid tap extended time in run mode

8. CAN LIFT ON DLY
   Amount of time after the shuttle pushes a can in to when the cylinder lifts to seam
9. ROLLER 1 ON
   Time roller one cylinder is extended
10. ROLLER 2 ON
    Time roller two cylinder is extended
11. CAN LIFT OFF DLY
    Amount of time before can is dropped after roller two is retracted

b. Main Connections

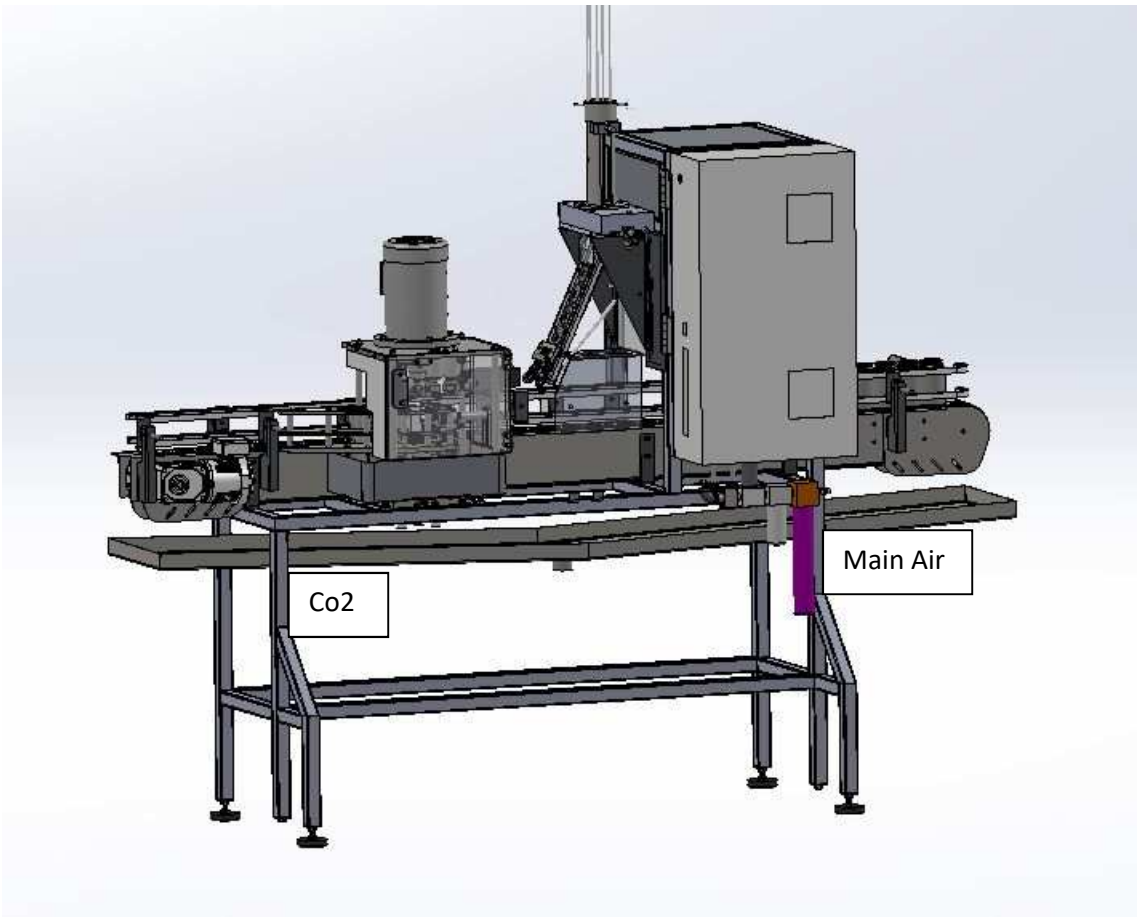

Figure 27 Main Connections

c. Troubleshooting Double Seam Guide

Double Seam Defects: Troubleshooting Guide

Common Cause	1st operation seam too loose	1st operation seam too tight	Seam length / height too long	Seam length / height too short	End hook too long	End hook too short	Body hook too long	Body hook too short	Countersink too deep	Countersink too shallow	High Seam Gap	Veeing / Pucker	Wrinkle	Reverse wrinkle	Skidders	Roll-over / Sharp seam	Split cut-over	False seam	End curl damaged	Knocked down flange	Mis-assembly of can & end	Body Buckling	Mushroom flange	Uneven / Seam variation	Sprung seam	Clam shell / Split seams	Common Causes	
		●		●	●			●		●		●	●	●	●	●						●			●		1st Operation Rolls	Too tight
	●		●			●	●				●	●	●															Too loose
		●		●	●			●						●		●						●						Profile too narrow
	●		●			●						●	●															Profile too wide
	●		●			●			●			●	●		●							●						Profile Worn
						●									●	●								●				Bearing worn
						●			●		●					●						●						High relative to chuck
										●						●												Low relative to chuck
			●				●								●	●	●					●			●	●	2nd Operation Rolls	Too tight
				●		●		●			●		●															Too loose
			●																									Profile too wide
			●						●				●															Profile Worn
																								●				Bearing worn
				●					●		●					●	●									●		High relative to chuck
										●												●						Low relative to chuck
					●												●										1st / 2nd Operation Rolls	Arms worn
															●											●		Bearing sluggish
																		●	●	●	●							In too long/ not returning
															●							●						Lip touching can body
									●		●																Chuck	Dia. too great
									●		●				●													Radius incorrect
									●												●							Chuck set too low
					●										●									●				Dia. down or worn
																●	●											Top lip worn
															●													Greasy
										●					●	●	●							●			Seaming spindle - excess play	
																				●	●						Knock-off rod cam setting	
							●	●	●		●				●					●		●				●	Pin height incorrect	
					●			●			●				●												Lifter	Force too low
						●	●									●						●				●		Force too high
					●			●							●													Spring damaged
															●						●							Greasy
																				●		●	●				Filler spring force too strong	
																			●		●						End feed pushers	
																			●	●	●						End guide adjustment	
																		●	●	●	●						End incorrectly positioned on can	
																		●	●	●	●						End guide/ can guide alignment	
																				●	●						Infeed chain / can feed turret timing	
																			●		●	●					Can feed turret / seaming head timing	
						●	●								●												Mushroom flanges	
																		●	●		●						Knock-down flanges	
													●						●								Ends	Poor curl
																●		●	●									Damaged curl
					●				●			●																Cut edge too large
						●				●																		Cut edge too small
																	●							●	●	●	Lining compound excessive	
																	●							●	●	●	Lining compound uneven	
					●										●						●						Body Hook	Too short
						●											●								●	●		Too long
						●					●																Deep countersink	
																			●	●			●				Delivery / packaging poor	
																				●			●				Can handling / conveyors poor	
													●		●											●	Incorrect greasing	

Figure 28 Seam Troubleshooting, Provided by Ball Corporation

d. Double Seam Specifications

The following are examples of common double seam guides. It is up to the individual brewery and can/end provider to ensure the correct double seam guide is being used and adhered to. It is also the responsibility of the brewery to ensure maintenance of the seamer, as outlined in the Preventative Maintenance Section.

Terminology: External Parameters

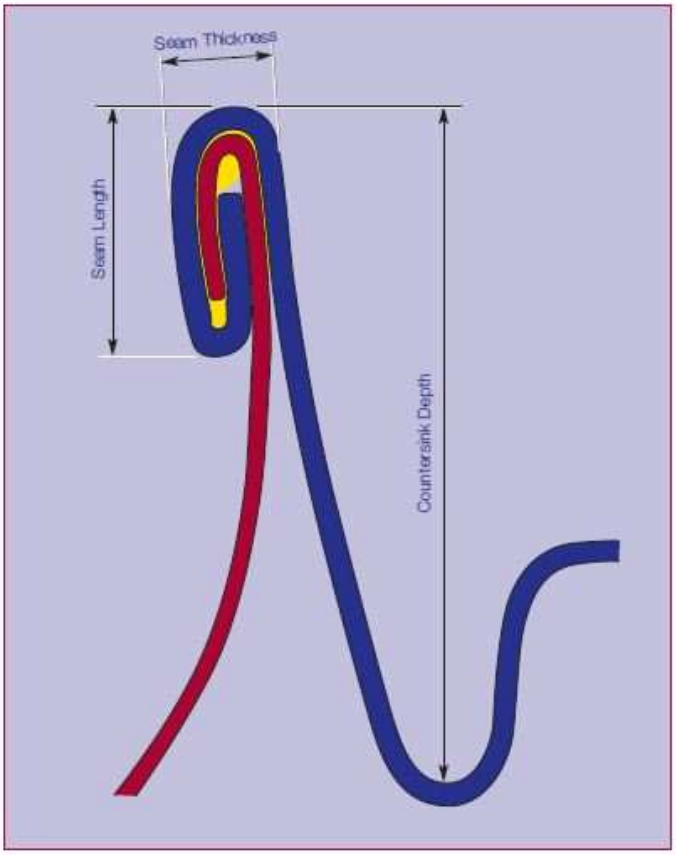

Terminology: Internal Parameters

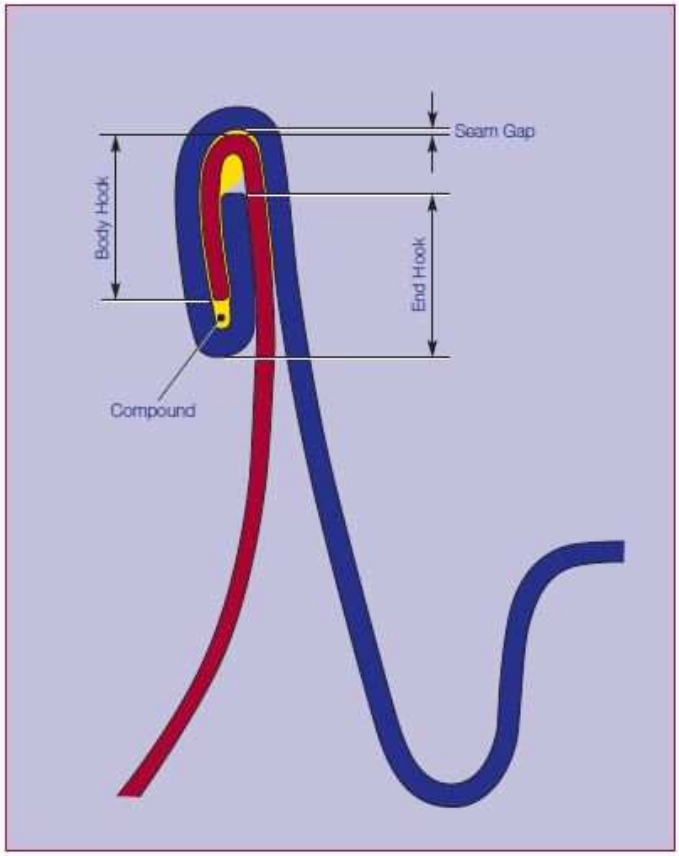

SPECIFICATION NO.	202 LOE
DATE ISSUED:	7/5/2005

CROWN CORK & SEAL CO. INC.

CUSTOMER DOUBLE SEAM SPECIFICATION

TYPE OF CAN:	D&I ALUMINUM	*CAN SIZE:*	202/211 X 413
TYPE OF CAN:		*END PLATE WT.*	
BODY PLATE WT:	NOMINAL	*END PLATE WT.*	.0086-84 ALUMINUM

ANGELUS SEAMER MODEL NO.	60L - 61H - 120L - 120LG - 121L - 140S - 180S
C.C.C. SEAMER MODEL NO.	449 - 649 - 751 - 2100 - 2150 - 2200

	Angelus Part #	C.C.C. Part #	CMB Part#
CHUCK NUMBER	718L636JCB7	1362503	82020204C71SAT
1ST OP. ROLL	297L641-R90	SRG121 / SRG134	13154
	N/A	N/A	13121
2ND OP. ROLL	298L641-S141	N/A	13155
	298L641-S147	SRG218	13190
	N/A	N/A	13185

PIN GAUGE HEIGHT AT END OF 1ST OPERATION	4.499 +0.010/-0.005 Read Note 5
BASE PLATE SPRING PRESSURE AT .030 DEFLECTION	110 LBS. +/- 10 LBS.

SEAM SPECIFICATIONS	**SET-UP & OPERATING**	**OPERATING**
1ST OPERATION SEAM THICKNESS	0.078 +/- 0.002	Check weekly
1ST OPERATION SEAM WIDTH	0.080 Max	Check weekly
1ST OPERATION COUNTERSINK DEPTH	0.273 Max.	Read note 1
2ND OPERATION SEAM THICKNESS-ALUMINUM	0.043 +/- 0.002	Read note 1
2ND OPERATION SEAM THICKNESS-STEEL	N/A	
2ND OPERATION SEAM WIDTH	S147=0.100 +/- 0.003	Read note 3
2ND OPERATION SEAM WIDTH (DIFF ROLL)	S141=0.098 +/- 0.003	Read note 3
COUNTERSINK DEPTH	0.270 +/- 0.005	Read note 3
BODY HOOK LENGTH	0.065 +/- 0.010	0.053 Min, Read note 2
COVER HOOK LENGTH	0.053 Min.	0.053 Min, Read note 2
COVER HOOK WRINKLE RATING - STEEL	N/A	
COVER HOOK WRINKLE RATING - ALUM.	95-100%	90-100%
OVERLAP - ACTUAL	0.035 Min.	0.025 Min.
PRESSURE RIDGE	Visible & Continuous	Read note 5

NOTE 1: TO MAINTAIN AN ADEQUATELY TIGHT SEAM, THE 2ND OPERATION SEAM THICKNESS SHOULD NOT BE OVER THIS MAXIMUM WITH THE WRINKLE RATING AT 100% AND A VISIBLE & CONTINOUS PRESSURE RIDGE INSIDE THE CAN.

NOTE 2: BODY HOOKS AND COVER HOOKS WITHIN THESE LIMITS ARE ACCEPTABLE; BUT ONLY IF MINIMUM OVERLAP IS OBTAINED.

NOTE 3: TO MAINTAIN AN ADEQUATE OVERLAP THE BOBY HOOK, COVER HOOK, 2ND OPERATION SEAM WIDTH AND THE COUNTERSINK DEPTH MUST BE HELD WITHIN SPECIFICATIONS.

NOTE 4: OVERLAP DIMENSIONS MUST BE MEASURED WITH A SEAM PROJECTOR. THREE READINGS PER CAN SHOULD BE TAKEN AT 120 DEGRESS APART.

NOTE 5: THE QUALITY OF THE DOUBLE SEAM IS THE RESPONSIBILITY OF THE FILLING CUSTOMER.

CUSTOMER:	LOCATION:

	CROWN LOE	0.098 +/- 0.003	0.043 +/- 0.002	0.053 MIN	0.065 +/- 0.010	
	DATE	SEAM HEIGHT	SEAM WIDTH	COVER HOOK	BODY HOOK	COMMENT
1						
2						
3						
4						
5						
6						
7						
8						
9						
10						
11						
12						
13						
14						
15						
16						
17						
18						
19						
20						
21						
22						
23						
24						
25						
26						
27						
28						
29						
30						
31						
32						
33						
34						
35						
36						
37						
38						
39						
40						
41						
42						

SuperEnd Seam Specifications

Issue Date 10/3/2013

CROWN
Brand-Building Packaging™

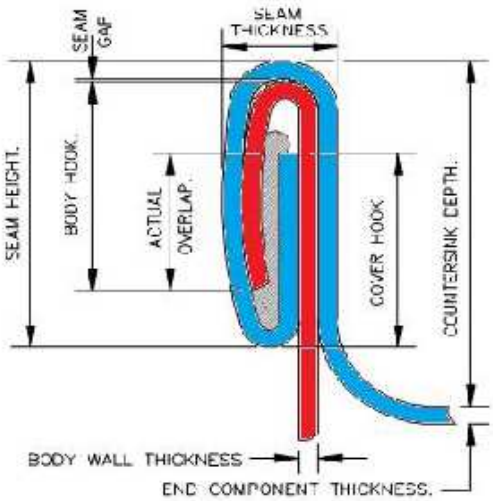

Type of Can	Aluminum Beverage Can with SuperEnd
PSAngelus Seamer Models	61H, 62H, 120L, 121L, 140S, 180S
CCC Seamer Models	450, 2100, 2150, 2200
Ferrum Seamer Models	F400-500-700 Series, F412, F512, F812, F918
Chuck Number	CMB 82020 23
1st Op Roll	CMB 13175
2nd Op Roll	CMB 13181
K. O. Pad	Contact CMB

Pin Height Target Settings	8OZ 202/211 x 307	3.125" +0.010" -0.005"
READ NOTE 1	10OZ 202/204.5 x 503	4.914" +0.010" -0.005"
	12OZ 202/211 x 413	4.500" +0.010" -0.005"
	16OZ 202/211 x 603	5.885" +0.010" -0.005"

Spring Pressure	115LBS ± 10lbs Read Note 2
Knockout Pad Setting	0.325" ± 0.002
Seaming Roll Grease	Grade 0 Read Note 3

ITEM	SET UP RANGE	OPERATING RANGE
1st Op Seam Thickness	0.078" ±0.003"	N/A
1st Op Seam Height	0.069" ±0.003"	N/A
1st Op Seam Countersink	0.270" ±0.006"	N/A
2nd Op Seam Thickness	0.043" ±0.002"	Guide only see Note 4
2nd Op Seam Height	0.095" ±0.003"	0.095" ±0.005"
2nd Op Seam Countersink	0.270" ±0.006"	0.272" ±0.008" See Note 5
Bodyhook	0.060" ±0.005"	0.061" ±0.009" See Note 6
Coverhook	0.060" ±0.005"	0.060" ±0.008"
Tightness Rating	100%	90-100%
Overlap (measured)	0.035" min	0.030" min See Note 7
Seam Gap	0.002" ±0.001"	0.004" Max
Bodyhook Butting	80-100%	70-100%
Pressure Ridge	Visible & Continuous	Visible & Continuous

All dimensions in inches unless otherwise noted

1. Pin height should be set to manage a proper bodyhook. Variance between stations should not be than 0.003" If you have grooved lifter plates start 0.010" lower than specification.
2. No more than 20lb difference between stations should be observed
3. Avoid over greasing of rolls. Over lubricated seaming rolls can become tight and harder to turn and may lead to deadheads or skidders. Use "O" grade grease or Kluber Food NH1 14-261 for Eco-Seal Bearing KluberFood NH1 64-422 for Ultra-seal Bearing.
4. Use in combination with seam height, tightness and pressure ridge to assess the quality of the seams. Thickness variation around the seam should not exceed 0.003"
5. Measure countersinks either side of the tab with can depressurized Adjustments not necessary unless consistently at top of specification range.
6. Occasional Bodyhook lengths of 0.072" may be observed. Adjustment only necessary if consistently above 0.070"
7. Infrequent readings as low as 0.025" may be observed. Re-sample readings below 0.030" by cutting and evaluating at 90 degrees to the original cut.

The most reliable method for assuring the quality of the double seam is persistent inspections, frequent physical testing and equipment maintenance. Crown is not continuously in the customer's facility, has limited ability to perform testing at customer's facility and does not continuously maintain customers equipment. The quality of the double seam is the responsibility of the filling customer. The seam should be assessed by trained personnel using a combination of optical and teardown methods. Seams should be judged in their entirety and not by dimensions alone.

Signiture Title

	CROWN SuperEnd	0.095 +/- 0.003	0.043 +/- 0.002	0.060 +/- 0.005	0.060 +/- 0.005	
	DATE	SEAM HEIGHT	SEAM WIDTH	COVER HOOK	BODY HOOK	COMMENT
1						
2						
3						
4						
5						
6						
7						
8						
9						
10						
11						
12						
13						
14						
15						
16						
17						
18						
19						
20						
21						
22						
23						
24						
25						
26						
27						
28						
29						
30						
31						
32						
33						
34						
35						
36						
37						
38						
39						
40						
41						
42						

202 MINI SEAM
RECOMMENDED DOUBLE SEAM SPECIFICATIONS

	ANGELUS
SEAMING CHUCK	718L636 (or equiv.)
FIRST OPERATION ROLL	297L641-R-90 (or equiv.)
SECOND OPERATION	298L641-S-141 (or their equiv)

MACHINE SET UP SPECIFICATIONS (NOTE 1)

PIN HEIGHT

CAN SIZE	DESCRIPTION	INCHES	METRIC
202/211 X 307	8 oz SQUAT	3.125 ± .003	79,38 ± 0,08
202/211 X 310	8 oz SUPER SQUAT	3.305 ± .003	83,95 ± 0,08
202/211 X 409	333ml	4.250 ± .003	107,95 ± 0,08
202/211 X 413	12 oz	4.500 ± .003	114,30 ± 0,08
202/211 X 603	16 oz	5.880 ± .003	149,35 ± 0,08
202/204 X 402	7.5 oz (204) SLEEK	3.775 ± .003	98,89 ± 0,08
202/207.7 X 400	8 oz (207.5) SLEEK	3.675 ± .003	93,35 ± 0,08
202/207.5 X 403	8 oz (207.5) SUPER SLEEK RETORT	3.875 ± .003	98,43 ± 0,08
202 X 207.5 X 413	10 oz (207.5) SLEEK	4.500 ± .003	114,30 ± 0,08
202/207.5 X 510	12 oz (207.5) SLEEK	5.315 ± .003	135,00 ± 0,08
202/211 X 707	568ml (550ml BRE END)	7.091 ± .003	180,11 ± 0,08

BASE PLATE LOAD (LBS)			
	COLD FILL	100 lbs ± 5 lbs	45.36 ± 2.27
	HOT FILL	130 lbs ± 20 lbs	58.97 ± 9.07

PRODUCT SPECIFICATIONS DIMENSIONS AND PARAMETERS		SET UP SPECIFICATION (IN)	SET UP SPECIFICATION (METRIC)	OPERATING SPECIFICATION (IN)	OPERATING SPECIFICATION (METRIC)
FIRST OPERATION SEAM THICKNESS		.076 ± .002	1,93 ± 0,05		
FIRST OPERATION COUNTERSINK DEPTH		.270 ± .003	6,86 ± 0,08		
SECOND OPERATION SEAM THICKNESS	.0086 GAUGE	.044 ± .001	1,118 ± 0,025	.042 - .046	1,07 - 1,17
	.0088 GAUGE	.045 ± .001	1,143 ± 0,025	.043 - .047	1,09 - 1,19
SECOND OPERATION COUNTERSINK DEPTH		.270 ± .003	6,86 ± 0,08	.270 ± .005	6,86 ± 0,13
SEAM HEIGHT		.096 - .100	2,438 – 2,540	.095 - .101	2,413 – 2,565
BODY HOOK LENGTH		.065 ± .005	1,65 ± 0,13	.065 ± .010	1,65 ± 0.25
COVER HOOK LENGTH		.060 ± ..005	1,52 ± 0,13	.053 min	1,35 min
TIGHTNESS RATING		100%	100%	90% min	90% min
ACTUAL OVERLAP		.035 min	0,89 min	.025 min	0,64 min

NOTE 1: Machine set up specifications are for initial setting only. Adjustments from these settings should be made as needed to achieve product specification requirements

NOTE 2 Double seam quality is the responsibility of the customer.

Date	Approved	PRODUCT STANDARD
10/19/09	Traphagen	202 B-64 END .0086" & .0088" GAUGE
Drawn N Zanetell	Approved	ANGELUS S-141 SECOND OPERATION
Checked R McCauley	Approved	DOUBLE SEAM ALUMINUM CAN
Approved R McCauley	Approved	

METAL BEVERAGE CONTAINER OPERATIONS
9300 W. 108TH CIRCLE
WESTMINSTER, CO 80021-3682
P.O. BOX 589, BROOMFIELD, CO 80038-0589

PRODUCT STANDARD	REV
SEAM - 231	E

American Beer Equipment

2001 SW 6th St.
Lincoln, NE 68522

	BALL- 86 GA	0.096 -0.100	0.044 +/- 0.001	0.060 +/- .005	0.065 +/- 0.010	
	DATE	SEAM HEIGHT	SEAM WIDTH	COVER HOOK	BODY HOOK	COMMENT
1						
2						
3						
4						
5						
6						
7						
8						
9						
10						
11						
12						
13						
14						
15						
16						
17						
18						
19						
20						
21						
22						
23						
24						
25						
26						
27						
28						
29						
30						
31						
32						
33						
34						
35						
36						
37						
38						
39						
40						
41						
42						

American Beer Equipment

2001 SW 6th St.
Lincoln, NE 68522

ArdaghGroup

CUSTOMER EQUIPMENT SERVICE
RECOMMENDED DOUBLE SEAM GUIDELINES
FOR BEER AND BEVERAGE CUSTOMERS

Beverage Customer Equipment Services

CAN 2 PIECE ALUMINUM
END: ALUMINUM .00865 B64

CAN SIZE: 16 OZ. 202/211 X 603

CLOSING MACHINE: ANGELUS 120L & 121L
SEAMING CHUCK # 718L636 JCB
1ST OPER. ROLL# 297L641 R90 or R90E

LIP THICKNESS: 270"
2ND OPER. ROLL # 298L641 S141

PIN GAUGE HEIGHT AT END OF 1ST. OPERATION: 5.875" + .010" - .005"
BASE PLATE SPRING PRESSURE: 100 LBS± 10# AT .030" DEF.

SEAM DIMENSIONS	SET-UP	OPERATING
1ST OPER. SEAM THICKNESS	.076" ± .002"	.076" ± .002"
1ST OPER. SEAM WIDTH	.080" MAX	
1ST OPER. COUNTERSINK DEPTH	.270" MAX	.270" ± .002"
2ND OPER. SEAM THICKNESS	.044" + .001" - .002	.044" ± .002"
2ND OPER. SEAM HEIGHT	.099" -.001 + .002"	.099" ± .002"
2ND. OPER. COUNTERSINK DEPTH	.270" ± .002"	.270" ± .005"
BODY HOOK LENGTH	.065" ± .010"	.065" ± .010"
COVER HOOK LENGTH	.060" ± .005"	.055" MIN
COVER HOOK TIGHTNESS RATING	100%	95% - 100%
OVERLAP, ACTUAL OPTICAL ONLY	.035" MIN	.030" MIN
PRESSURE RIDGE	VISIBLE AND CONTINUOUS	

THE QUALITY OF THE DOUBLE SEAM IS THE RESPONSIBILITY OF THE CUSTOMER.

NOTE 1. A good first operation seam must be made to obtain a satisfactory finished seam. A first operation seam check should be made every 80 operating hours.
NOTE 2. Final appraisal of a seam should be based on visual examination of the "torn down" seam of three (3) samples per station before making any adjustments on the seamer.
NOTE 3. Seams are to be tightened when cover hook tightens falls below minimum operating limits.
NOTE 4. Caution – Close inspection of body wall impression should be made during seam evaluation. Regardless of 2nd. Operation dimensions, if extreme deep body impression is noted, body wall fractures could result.
NOTE 5. AG does not recommend chuck anvil modifications for station identification as seam integrity may be compromised.
NOTE 6. External dimensions should be taken with the internal can pressure released.
NOTE 7. It is recommended that a complete double seam tear down be done every 4 hours of operation and a visual examination be done every 2 hours.
NOTE 8. Double seam measurements taken with a seam computer should be rechecked with a hand seam micrometer before any double seam adjustments are made.

The revision date 1/1/14 supersedes all other previously issued guidelines.

CUSTOMER:	**LOCATION:**

File Name: 12OZS141.doc

	Ardagh	0.099, -.002 +.001	0.044, +.001-.002	0.060 +/- .005	0.065 +/- 0.010	
	DATE	SEAM HEIGHT	SEAM WIDTH	COVER HOOK	BODY HOOK	COMMENT
1						
2						
3						
4						
5						
6						
7						
8						
9						
10						
11						
12						
13						
14						
15						
16						
17						
18						
19						
20						
21						
22						
23						
24						
25						
26						
27						
28						
29						
30						
31						
32						
33						
34						
35						
36						
37						
38						
39						
40						
41						

42						

e. Screen Images

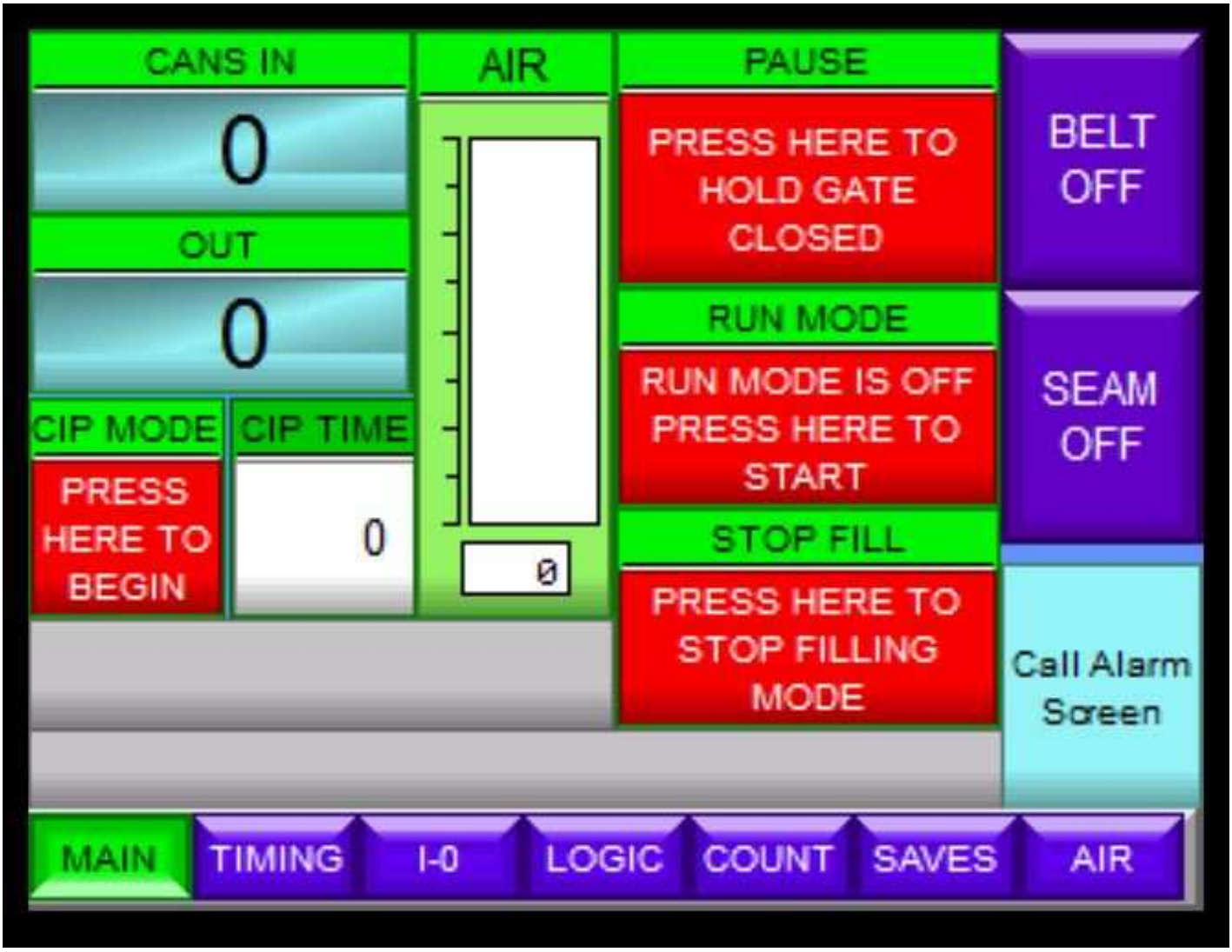

Figure 29 Main Screen (HOME)

Figure 30 Timing Setup

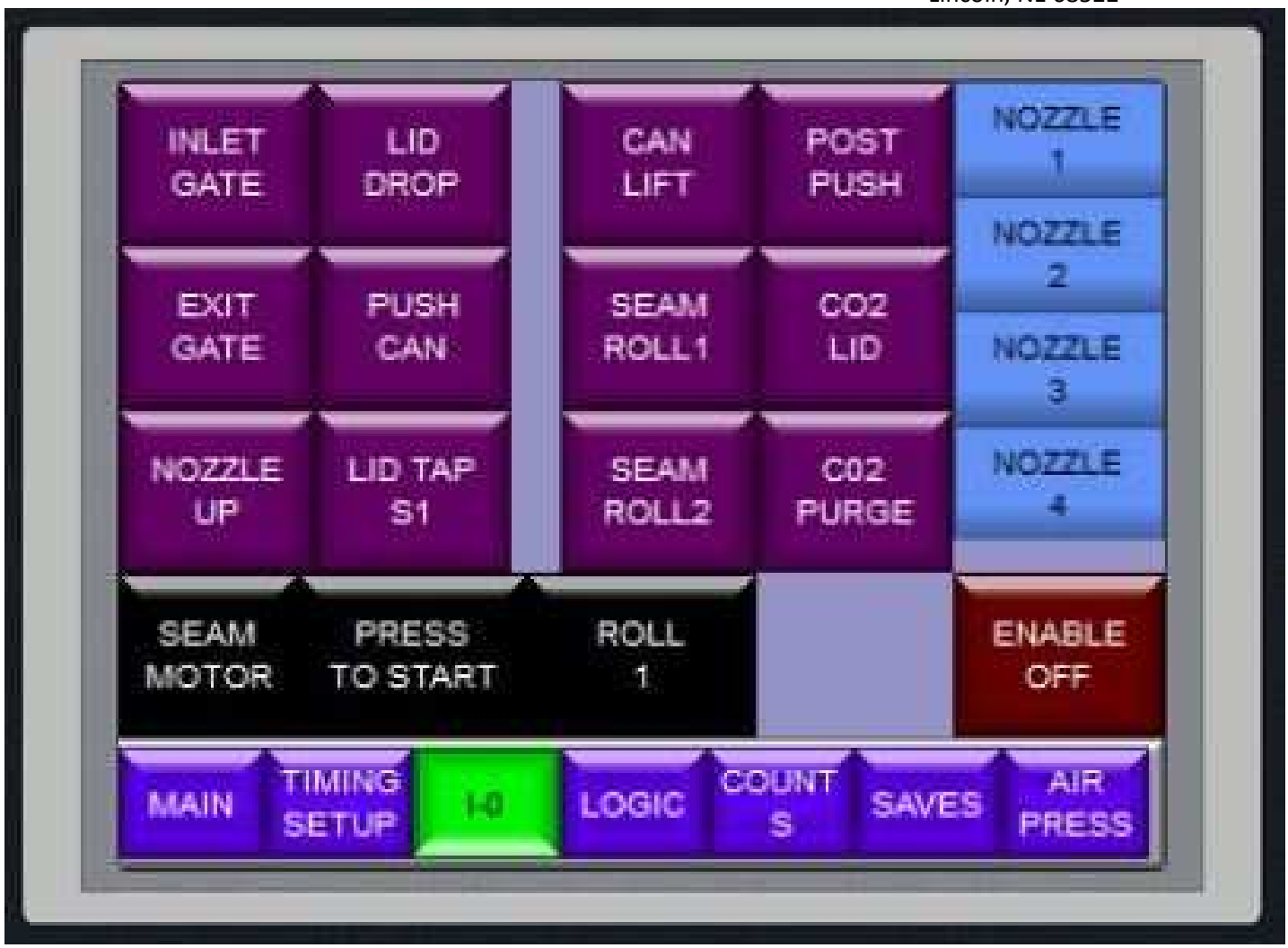

Figure 31 Inputs and Outputs Screen

Figure 32 Diagnostics Screen

Figure 33 Can Count

Figure 34 Saved Setups for Custom Recipes

f. Clock Adjustment

If you would like to change the PLC clock time, Figure 33, perform the following:

Setting – Adjust Clock

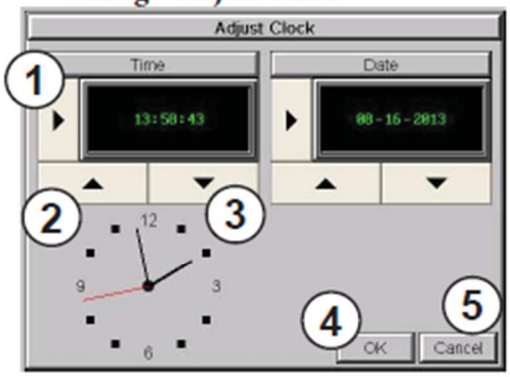

Item No.	Function		Description	Comments
1	Select	▶	**Time:** Each press of the **Select** button will cycle thru the following settings. 1.) No Selection to Hours 2.) Hours to Minutes 3.) Minutes to Seconds 4.) Seconds back to Hours **Date:** Each press of the **Select** button will cycle thru the following settings. 1.) Month to Day 2.) Day to Year 3.) Year back to Month	
2	Up	▲	Press to increment the value by "1" with each press.	
3	Down	▼	Press to decrement the value by "1" with each press.	
4	OK		Press to accept the changes.	
5	Cancel		Press to return to the **Setting Menu** screen without accepting the changes.	

*NOTE: The function buttons used to adjust the clock settings on the panel's setup screen are **disabled** if an **External** clock source is selected in the **C-more** programming software. The choice of an internal or external clock source is available by selecting **Clock Source** in the **C-more** programming software under the **Main Menu** drop down function **Setup**.*

*NOTE: The panel's clock can also be adjusted from the **C-more** programming software. The **Adjust Clock** function can be accessed in the software by selecting **Adjust Clock** under the **Main Menu** drop down function **Panel** or selecting **Adjust Clock** under the **Panel** tab in the software's **Navigation** window.*

Figure 35. Adjusting the Clock

Setting Menu

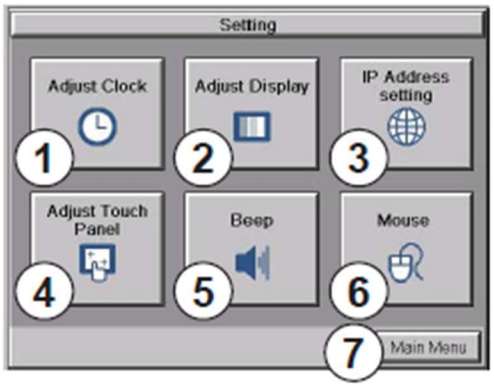

The **Setting Menu** is used to adjust the time & date, adjust the contrast or brightness of the display, enter the IP address settings, adjust (calibrate) the touch screen, enable or disable the internal beep and turn on and off the mouse cursor .

Item No.	Function	Description	Comments
1	**Adjust Clock**	Press to go to the **Adjust Clock** screen.	
2	**Adjust Display**	Press to go to the **Adjust Display** screen.	
3	**IP Address**	Press to go to the **IP Address** screen	The IP Address can also be set from the programming software or by the project.
4	**Adjust Touch Panel**	Press to go to the **Adjust Touch Panel** screen.	
5	**Beep**	Press to go to the **Beep** screen.	
6	**Mouse**	Press to go to the **Mouse** screen.	
7	**Main Menu**	Press to return to the **Main Menu** screen.	

Figure3 5. Setting Menu

Accessing the System Setup Screens (no project loaded)

To access the Main Menu of the touch panel System Setup Screens prior to downloading a project, press the extreme upper left corner of the panel display area for 3 seconds as shown below. The Main Menu will then be displayed.

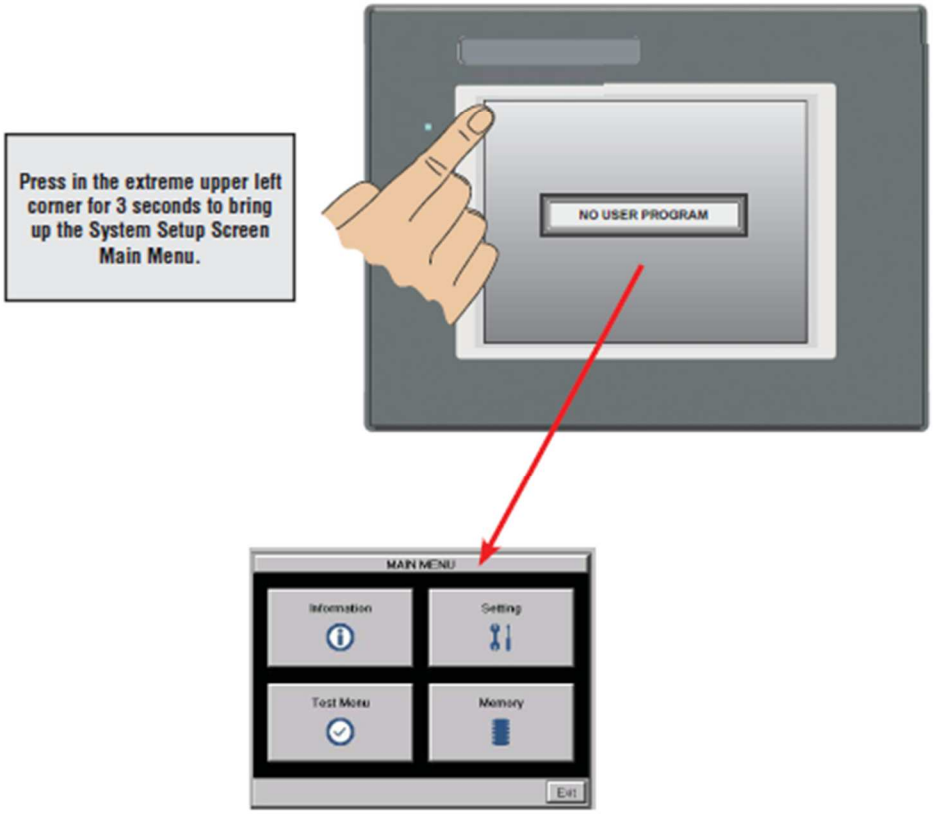

Figure36. Accessing the System Setup Screen

g. Checklists

Item	Description
Beer Pre-Start	Ensure beer is cleared for canning, every day before starting
Production Startup	Ensure canning line is ready to go every day before starting
Hourly Check	Perform hourly during runs. If something happens, you have a log for how far back to look for the problem.
Crown Checklist	Record Seam Height and Width every 15 minutes. Perform tear-down hourly. Target dims must be taken from YOUR double seam guide.
Ball Checklist	Record Seam Height and Width every 15 minutes. Perform tear-down hourly. Target dims must be taken from YOUR double seam guide.
Rexam Checklist	Record Seam Height and Width every 15 minutes. Perform tear-down hourly. Target dims must be taken from YOUR double seam guide.

American Beer Equipment

2001 SW 6th St.
Lincoln, NE 68522

Acceptable Beer Pre-Startup Checklist, American Beer Equipment

Date		Process Department	Quality Assurance
Product Item#/Sku Being Produced		Vessel #	
Process Leader		Operator	
Individual Taking Pre-Canning Check		Operator	

Specific Beer Pre-Start Checklist			
Task Number	Leader Initials	Operator Initials	Pre-Run/Set-Up Task Description with Specific Detail Relative to Task, Measurements, Settings, outcomes critical to quality, safety, etc.
1			Is the bacteria level on the filler nozzle acceptable?
2			Is the carbonation level of the beer acceptable?
3			Is the dissolved oxygen of the beer acceptable?
4			Is the brite tank pressure correct?
5			Is the entire CIP chemical out of the beer line?
9			Has foam been bled out of the lines?

Production Start Up Sheet- American Beer Equipment			
Department		Date	
Product Being Produced		Raw Material #1	
Raw Material #2		Raw Material #3	
Can Component Number		Lid Component Number	
Case Component Number		Finished Product/SKU Number	
Total Number To Be Produced (cans, bottles, cases, etc.)		Verbal Description of Product Produced	
Process Leader's Name (please Print)		Lead Operator's Name (please print)	

Specific Start Up Check List			
Task Number	Leader Initials	Operator Initials	Pre-Run/Set-Up Task Description with Specific Detail Relative to Task, Measurements, Settings, outcomes critical to quality, safety, etc.
1			Ensure seamer lock nut for roller operation # 1 and roller operation #2 is tight - (Spare Parts, Figure 1, #4)
2			Ensure operation #1 and operation #2 seamer set screw, on canning line # 1 and canning line #2, is tight - (Spare Parts, Figure 1, #3)
3			Ensure seaming chuck set, including screw, is tight (Spare Parts, Figure 2, #11) and visually inspect the chuck for tightness (if it is tight, there will be no gap between the chuck and upper adapter)
4			Ensure the complete seamer cylinder, and lower bearing assembly, bolts are tight (130 Nm). (Spare Parts, Figure 2, #13)
5			Ensure lower seamer puck is not loose or wobbly (Spare Parts, Figure 2, #16)
6			Ensure flow control jam nuts are not loose. (Spare Parts, Figure 2, #12 and #15)
7			Warm water wash any cylinder that has been exposed to beer. Special attention must be directed to the shuttle cylinder that moves cans into the seamers. (Spare Parts, Figure 3, # 18)
8			Lubricate (food grade lubricant) all cylinders following warm water wash.
9			Check for smooth cylinder operation (shuttle into steamer, filler nozzle, lid taps, seaming cylinders, etc.) and seaming rollers. If not traveling smoothly, repeated warm water wash and lubrication process.
10			Following warm water wash/lubrication, observe cylinder speed and adjust flow control. Travel rate of cylinder should be controlled and fast enough to

			achieve desired throughput rate, while also working to avoid erratic or overly aggressive rate that "throws" cans.
11			Ensure lid stack sleeve is full. (Spare Parts, Figure 6, # 24)
12			Ensure supply cans are ready to exit the de-palletizer or feed table and enter the canning line.
13			Perform Seam Check on three cans per seamer. Remove cans and conduct tear-down. Measure to ensure seam is in spec. Record data on can checklist (12. Double Seam Specs).
14			Ensure cans are present on the seamer pucks. (Spare Parts, Figure 2, #16)

Task Number	
*	Detailed explanation/comments required for any task not completed or partially completed
	If a fastener is loose, the threads must be cleaned (with a cleaner/degreaser- Loctite Cleaner and Degreaser is recommended) and Blue Loctite (242,243, or similar) must be applied.

Hourly Check Sheet- American Beer Equipment

Department		Process Area		Date	
SKU/Item # Being Produced		Product Description			

Audit #	Task Description	End of Hour One		End of Hour Two		End of Hour Three		End of Hour Four		End of Hour Five		End of Hour Six		End of Hour Seven		End of Hour Eight	
		Leader's Initials	Operators Initials	Leader's Initials	Operators Initials	Leader's Initials	Operators Initials	Leader's Initials	Operators Initials	Leader's Initials	Operators Initials	Leader's Initials	Operators Initials	Leader's Initials	Operators Initials	Leader's Initials	Operators Initials
1	Seam Inspection: seam height and width with caliper/micrometer																
2	Seam Teardown: complete teardown and measurement of seam																
3	Capping on foam?																

Total Units Produced	

Supervisor Signature/Date

Operator Signature/Date

Quality Assurance Review/Date

Predictive Maintenance Schedule

Craft Can 15

Description	Item #	# Rqrd.	Life cycle	Life cycle	Option Order
Filter for cabinet fan (Clean weekly)	100-124306	1	1	Years	1
COIN BATTERY, 3 VOLT, 560mAH, 23MM DIA X 5.4 MM TALL	783-202081	1	1	Years	1
TUBING, BEER NZL, 6MM OD 4MM ID, ACF	100-121525	120	1M	CANS	2
Pivot Bearings in Seamer arm	100-120145	4	2M	CANS	2
Bushing for seamer linkage pivot	100-120210	4	2M	CANS	2
Thrust Washer for Seamer Arm	100-120127	4	2M	CANS	2
Main Air Supply In-Line Filter	100-124610	1	3	Years	2
SENSOR, PHOTO, M12 4 PIN, M18 THREAD, ACF	100-124340	2	2.5	Years	2
Conveyor Gate Cylinder	649-206027	2	5M	Cans	2
Slicer Plate Cyl.	100-122570	1	5M	Cans	3
First Operation Roller (1 year @ 100% duty cycle)	100-120070	1	5M	CANS	3
Second Operation Roller (1 year @ 100% duty cycle)	100-120071	1	5M	CANS	3
Seamer Chuck (1 year @ 100% duty cycle)	100-120077	1	5M	CANS	3
Lid Tap Cyl	100-122925	2	7M	Cans	3
Shuttle Cylinder (Lincan 15)	100-126353	1	5M	Cans	3
BALL, FILLER NOZZLE, ACF	100-120009	4	1M	CYCLES	2
PACKING, FILLER NOZZLE, ACF	100-125002	5	1M	CYLCES	2
ADAPTER, PACKING, FILLER NOZZLE, ACF	100-125003	2	1M	CYCLES	2
SLICER PLATE AIR CYLINDER	100-122570	1	7M	Cans	3
FAN, PANEL, EXHAUST, SAGINAW, 230VAC, 50/60HZ, 16/14W, ACF	100-124307	1	5	Years	3
Pancake Cylinder for fill nozzles	100-125025	4	10M	Cans	3
Post-Push Cyl	100-120285	1	11.5M	Cans	3
Can Lift Cylinder	100-120355	1	10M	Cans	4
Seamer Cyl, American - Silver Bullet	100-120092	2	40M	Cans	4

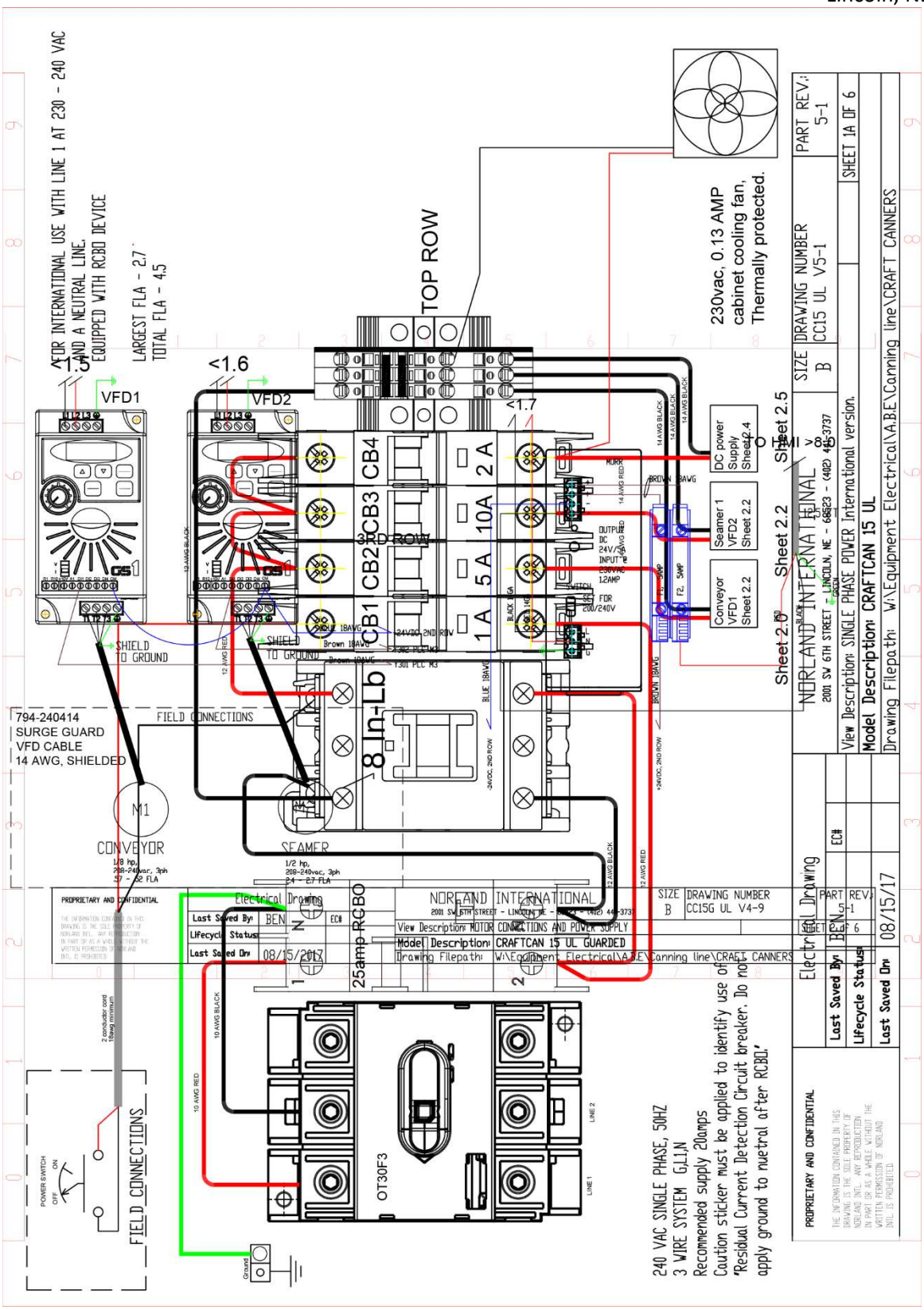
FOR INTERNATIONAL USE WITH LINE 1 AT 230 - 240 VAC
AND A NEUTRAL LINE.
EQUIPPED WITH RCBO DEVICE
LARGEST FLA - 2.7
TOTAL FLA - 4.5
TOP ROW
3RD ROW
VFD1
VFD2
<1.5
<1.6
<1.7
CB1
CB2
CB3
CB4
1 A
5 A
10A
2 A
8 In-Lb
230vac, 0.13 AMP
cabinet cooling fan,
Thermally protected.
DC power Supply Sheet 2.4
Seamer 1 VFD2 Sheet 2.2
Conveyor VFD1 Sheet 2.2
Sheet 2.5
Sheet 2.2
Sheet 2.0
SHIELD TO GROUND
794-240414
SURGE GUARD
VFD CABLE
14 AWG, SHIELDED
FIELD CONNECTIONS
M1
CONVEYOR
SEAMER
25amp RCBO
OT30F3
FIELD CONNECTIONS
POWER SWITCH
240 VAC SINGLE PHASE, 50HZ
3 WIRE SYSTEM G,L1,N
Recommended supply 20amps
Caution sticker must be applied to identify use of
"Residual Current Detection Circuit breaker. Do not
apply ground to nuetral after RCBO."
NORLAND INTERNATIONAL
2001 SW 6TH STREET - LINCOLN, NE - 68523 - (402) 441-3737
View Description: SINGLE PHASE POWER International version.
Model Description: CRAFTCAN 15 UL
Drawing Filepath: W:\Equipment Electrical\A.B.E\Canning line\CRAFT CANNERS
SIZE B
DRAWING NUMBER CC15 UL V5-1
PART REV.: 5-1
SHEET 1A OF 6
Electrical Drawing
Last Saved By: BEN
Lifecycle Status:
Last Saved On: 08/15/17
PROPRIETARY AND CONFIDENTIAL
View Description: MOTOR CONNECTIONS AND POWER SUPPLY
Model Description: CRAFTCAN 15 UL GUARDED
SIZE B
DRAWING NUMBER CC15G UL V4-9
SHEET 1 OF 6

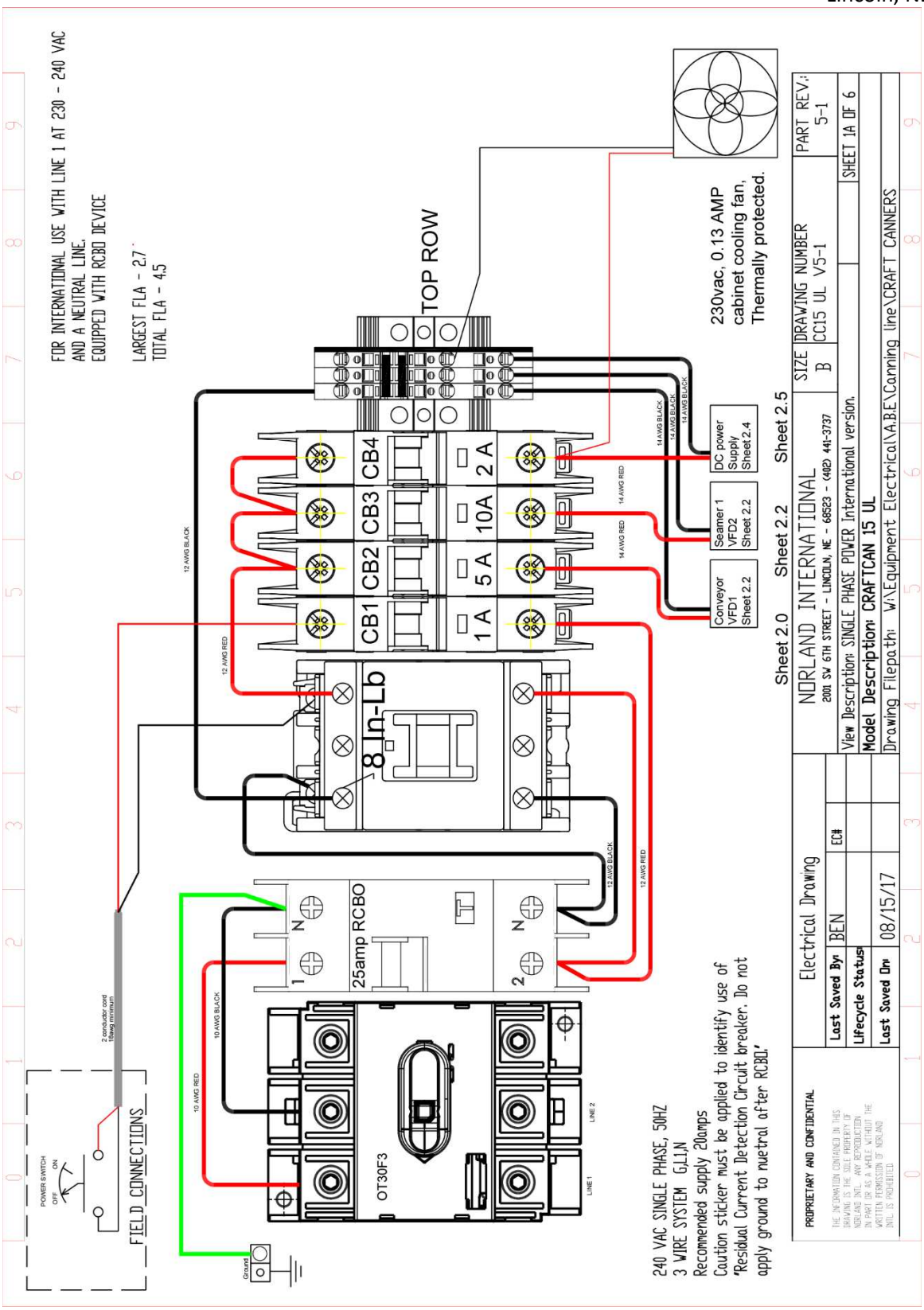
FOR INTERNATIONAL USE WITH LINE 1 AT 230 - 240 VAC
AND A NEUTRAL LINE.
EQUIPPED WITH RCBO DEVICE
LARGEST FLA - 2.7
TOTAL FLA - 4.5
TOP ROW
230vac, 0.13 AMP
cabinet cooling fan,
Thermally protected.
CB1
CB2
CB3
CB4
1 A
5 A
10A
2 A
8 In-Lb
25amp RCBO
OT30F3
FIELD CONNECTIONS
POWER SWITCH
OFF
ON
2 conductor cord
18awg minimum
Ground
LINE 1
LINE 2
12 AWG BLACK
12 AWG RED
10 AWG BLACK
10 AWG RED
14 AWG BLACK
14 AWG RED
Conveyor
VFD1
Sheet 2.2
Seamer 1
VFD2
Sheet 2.2
DC power
Supply
Sheet 2.4
Sheet 2.0
Sheet 2.2
Sheet 2.5
240 VAC SINGLE PHASE, 50HZ
3 WIRE SYSTEM G,L1,N
Recommended supply 20amps
Caution sticker must be applied to identify use of
"Residual Current Detection Circuit breaker. Do not
apply ground to nuetral after RCBO."
PROPRIETARY AND CONFIDENTIAL
THE INFORMATION CONTAINED IN THIS DRAWING IS THE SOLE PROPERTY OF NORLAND INTL. ANY REPRODUCTION IN PART OR AS A WHOLE WITHOUT THE WRITTEN PERMISSION OF NORLAND INTL. IS PROHIBITED.
Electrical Drawing
Last Saved By BEN
ECN
Lifecycle Status
Last Saved On 08/15/17
NORLAND INTERNATIONAL
2001 SW 6TH STREET - LINCOLN, NE - 68523 - (402) 441-3737
View Description: SINGLE PHASE POWER International version.
Model Description: CRAFTCAN 15 UL
Drawing Filepath: W:\Equipment Electrical\A.B.E\Canning line\CRAFT CANNERS
SIZE B
DRAWING NUMBER CC15 UL V5-1
PART REV.: 5-1
SHEET 1A OF 6

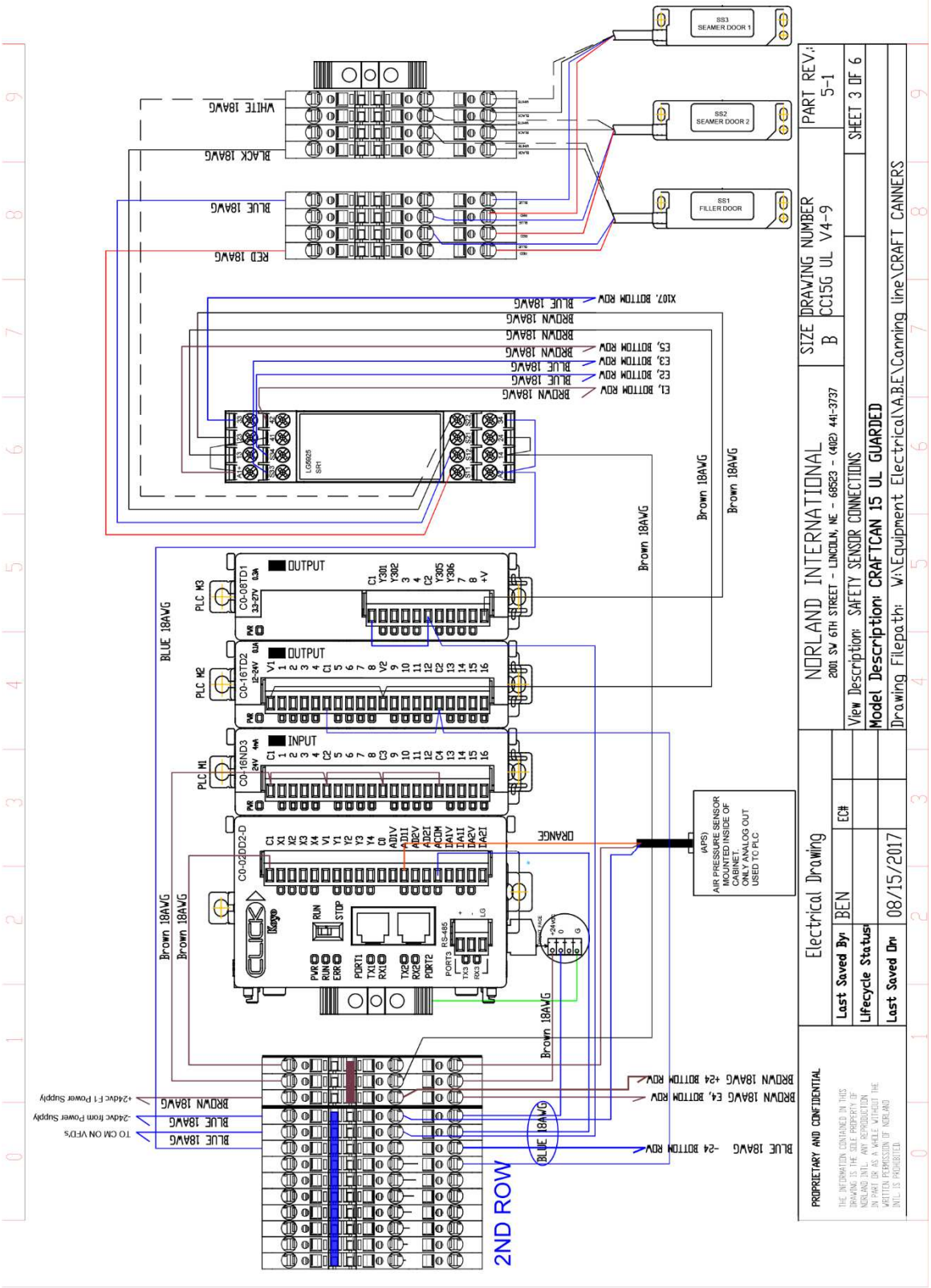
SS3 SEAMER DOOR 1
SS2 SEAMER DOOR 2
SS1 FILLER DOOR
WHITE 18AWG
BLACK 18AWG
BLUE 18AWG
RED 18AWG
X107, BOTTOM ROW
E1, BOTTOM ROW
E2, BOTTOM ROW
E3, BOTTOM ROW
E5, BOTTOM ROW
Brown 18AWG
BLUE 18AWG
PLC M3
PLC M2
PLC M1
OUTPUT
INPUT
DRANGE
(APS) AIR PRESSURE SENSOR MOUNTED INSIDE OF CABINET. ONLY ANALOG OUT USED TO PLC
+24dc F-1 Power Supply
-24dc from Power Supply
TO CM ON VFD's
BROWN 18AWG +24 BOTTOM ROW
BROWN 18AWG E4, BOTTOM ROW
BLUE 18AWG -24 BOTTOM ROW
2ND ROW
NORLAND INTERNATIONAL
2001 SW 6TH STREET - LINCOLN, NE - 68523 - (402) 441-3737
SIZE B
DRAWING NUMBER CC15G UL V4-9
PART REV: 5-1
SHEET 3 OF 6
View Description: SAFETY SENSOR CONNECTIONS
Model Description: CRAFTCAN 15 UL GUARDED
Drawing Filepath: W:\Equipment Electrical\A.B.E\Canning line\CRAFT CANNERS
Electrical Drawing
Last Saved By: BEN
EC#
Lifecycle Status:
Last Saved On: 08/15/2017
PROPRIETARY AND CONFIDENTIAL
THE INFORMATION CONTAINED IN THIS DRAWING IS THE SOLE PROPERTY OF NORLAND INT'L. ANY REPRODUCTION IN PART OR AS A WHOLE WITHOUT THE WRITTEN PERMISSION OF NORLAND INT'L. IS PROHIBITED.

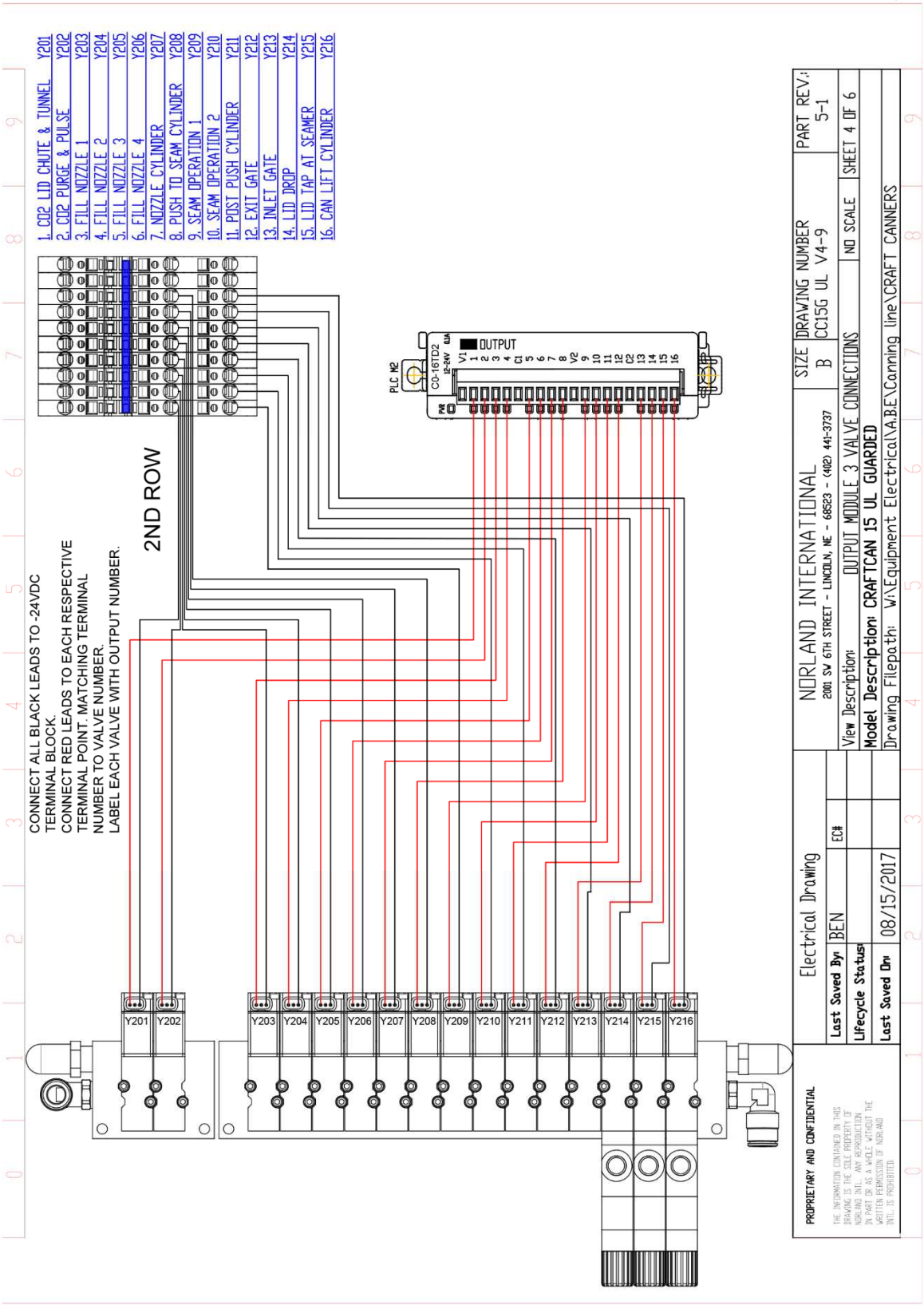
1. CO2 LID CHUTE & TUNNEL Y201
2. CO2 PURGE & PULSE Y202
3. FILL NOZZLE 1 Y203
4. FILL NOZZLE 2 Y204
5. FILL NOZZLE 3 Y205
6. FILL NOZZLE 4 Y206
7. NOZZLE CYLINDER Y207
8. PUSH TO SEAM CYLINDER Y208
9. SEAM OPERATION 1 Y209
10. SEAM OPERATION 2 Y210
11. POST PUSH CYLINDER Y211
12. EXIT GATE Y212
13. INLET GATE Y213
14. LID DROP Y214
15. LID TAP AT SEAMER Y215
16. CAN LIFT CYLINDER Y216
2ND ROW
CONNECT ALL BLACK LEADS TO -24VDC TERMINAL BLOCK.
CONNECT RED LEADS TO EACH RESPECTIVE TERMINAL POINT. MATCHING TERMINAL NUMBER TO VALVE NUMBER.
LABEL EACH VALVE WITH OUTPUT NUMBER.
PLC M2
CO-16TD2
OUTPUT
Y201 Y202 Y203 Y204 Y205 Y206 Y207 Y208 Y209 Y210 Y211 Y212 Y213 Y214 Y215 Y216
NORLAND INTERNATIONAL
2001 SW 6TH STREET - LINCOLN, NE - 68523 - (402) 441-3737
SIZE B
DRAWING NUMBER CC15G UL V4-9
PART REV: 5-1
View Description: OUTPUT MODULE 3 VALVE CONNECTIONS
NO SCALE
SHEET 4 OF 6
Model Description: CRAFTCAN 15 UL GUARDED
Drawing Filepath: W:\Equipment Electrical\A.BE\Canning line\CRAFT CANNERS
Electrical Drawing
Last Saved By: BEN
EC#
Lifecycle Status:
Last Saved On: 08/15/2017
PROPRIETARY AND CONFIDENTIAL
THE INFORMATION CONTAINED IN THIS DRAWING IS THE SOLE PROPERTY OF NORLAND INTL. ANY REPRODUCTION IN PART OR AS A WHOLE WITHOUT THE WRITTEN PERMISSION OF NORLAND INTL. IS PROHIBITED.

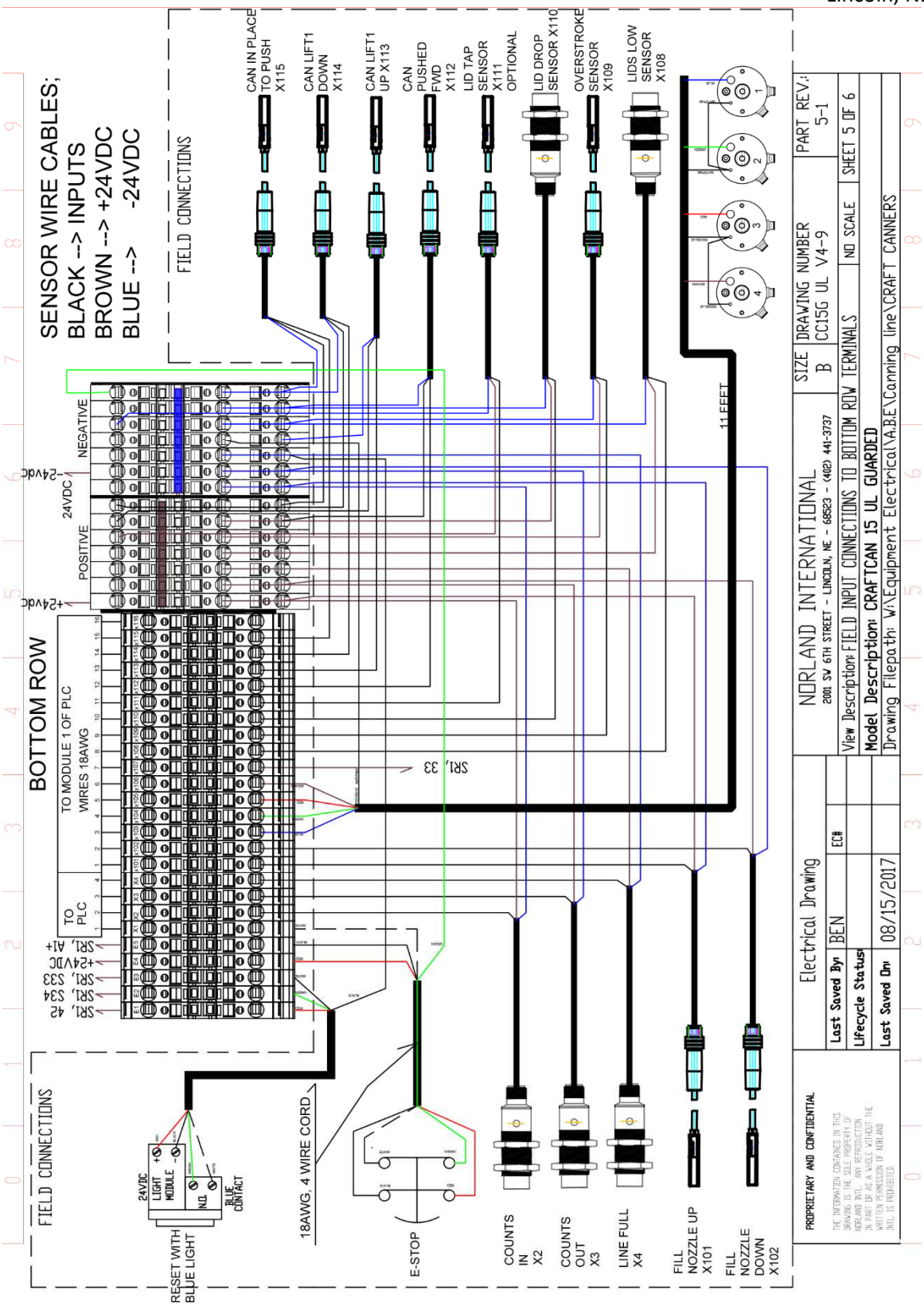
SENSOR WIRE CABLES;
BLACK --> INPUTS
BROWN --> +24VDC
BLUE --> -24VDC
FIELD CONNECTIONS
CAN IN PLACE TO PUSH X115
CAN LIFT1 DOWN X114
CAN LIFT1 UP X113
CAN PUSHED FWD X112
LID TAP SENSOR X111 OPTIONAL
LID DROP SENSOR X110
OVERSTROKE SENSOR X109
LIDS LOW SENSOR X108
11 FEET
BOTTOM ROW
TO MODULE 1 OF PLC
WIRES 18AWG
TO PLC
NEGATIVE
24VDC
POSITIVE
-24vdc
+24vdc
SR1, 33
SR1, A1+
+24VDC
SR1, S33
SR1, S34
SR1, 42
FIELD CONNECTIONS
24VDC
LIGHT MODULE
N.O.
BLUE CONTACT
RESET WITH BLUE LIGHT
18AWG, 4 WIRE CORD
E-STOP
COUNTS IN X2
COUNTS OUT X3
LINE FULL X4
FILL NOZZLE UP X101
FILL NOZZLE DOWN X102
NORLAND INTERNATIONAL
2001 SW 6TH STREET - LINCOLN, NE - 68523 - (402) 441-3737
SIZE B
DRAWING NUMBER CC15G UL V4-9
PART REV: 5-1
View Description: FIELD INPUT CONNECTIONS TO BOTTOM ROW TERMINALS
NO SCALE
SHEET 5 OF 6
Model Description: CRAFTCAN 15 UL GUARDED
Drawing Filepath: W:\Equipment Electrical\A.B.E\Canning line\CRAFT CANNERS
Electrical Drawing
Last Saved By: BEN
EC#
Lifecycle Status:
Last Saved On: 08/15/2017
PROPRIETARY AND CONFIDENTIAL
THE INFORMATION CONTAINED IN THIS DRAWING IS THE SOLE PROPERTY OF NORLAND INTL. ANY REPRODUCTION IN PART OR AS A WHOLE WITHOUT THE WRITTEN PERMISSION OF NORLAND INTL. IS PROHIBITED.

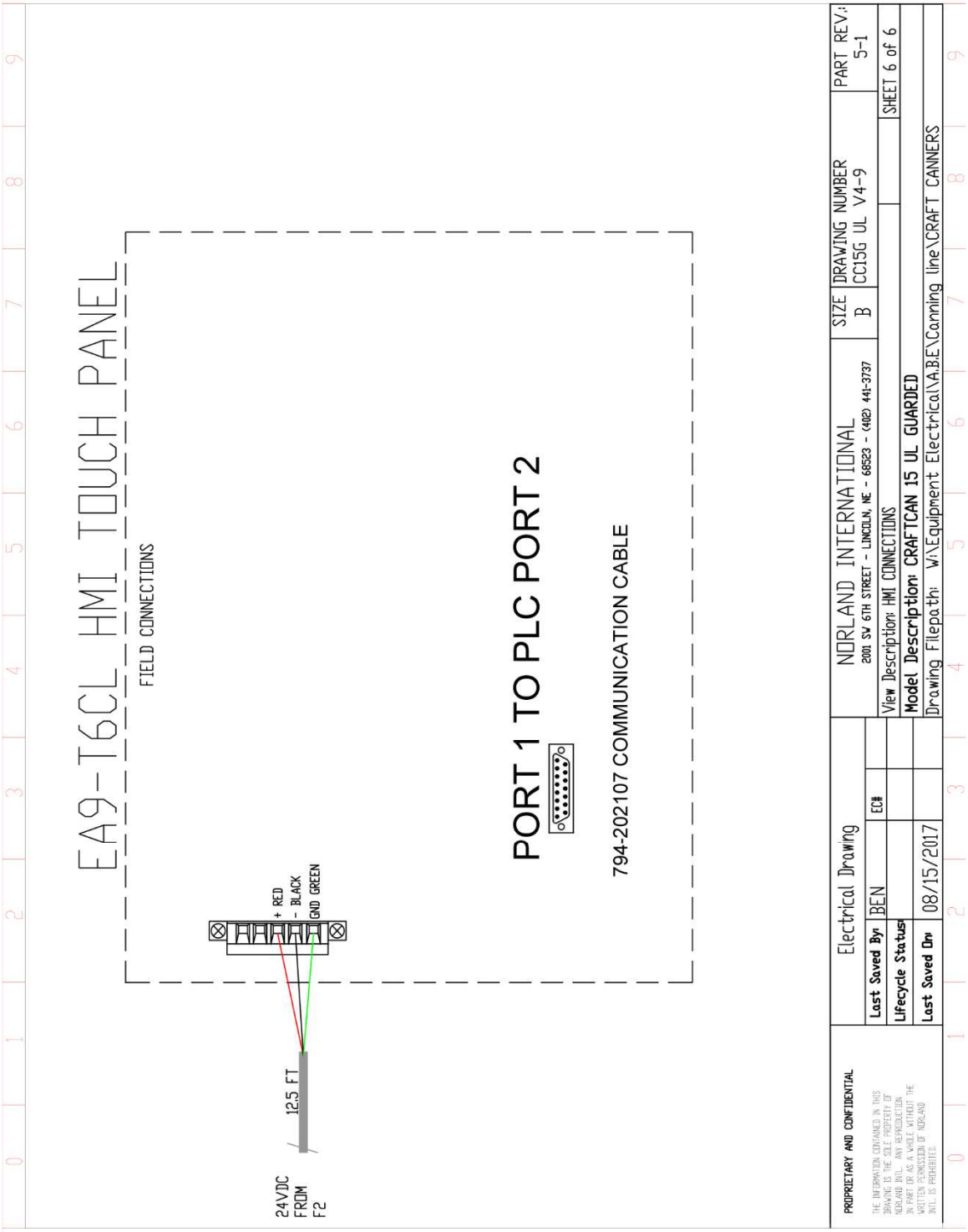
EA9-T6CL HMI TOUCH PANEL
FIELD CONNECTIONS
+ RED
- BLACK
GND GREEN
12.5 FT
24VDC
FROM
F2
PORT 1 TO PLC PORT 2
794-202107 COMMUNICATION CABLE
PROPRIETARY AND CONFIDENTIAL
THE INFORMATION CONTAINED IN THIS DRAWING IS THE SOLE PROPERTY OF NORLAND INTL. ANY REPRODUCTION IN PART OR AS A WHOLE WITHOUT THE WRITTEN PERMISSION OF NORLAND INTL. IS PROHIBITED.
Electrical Drawing
Last Saved By: BEN
EC#
Lifecycle Status:
Last Saved On: 08/15/2017
NORLAND INTERNATIONAL
2001 SW 6TH STREET - LINCOLN, NE - 68523 - (402) 441-3737
View Description: HMI CONNECTIONS
Model Description: CRAFTCAN 15 UL GUARDED
Drawing Filepath: W:\Equipment Electrical\A.B.E\Canning line\CRAFT CANNERS
SIZE
B
DRAWING NUMBER
CC15G UL V4-9
PART REV:
5-1
SHEET 6 of 6

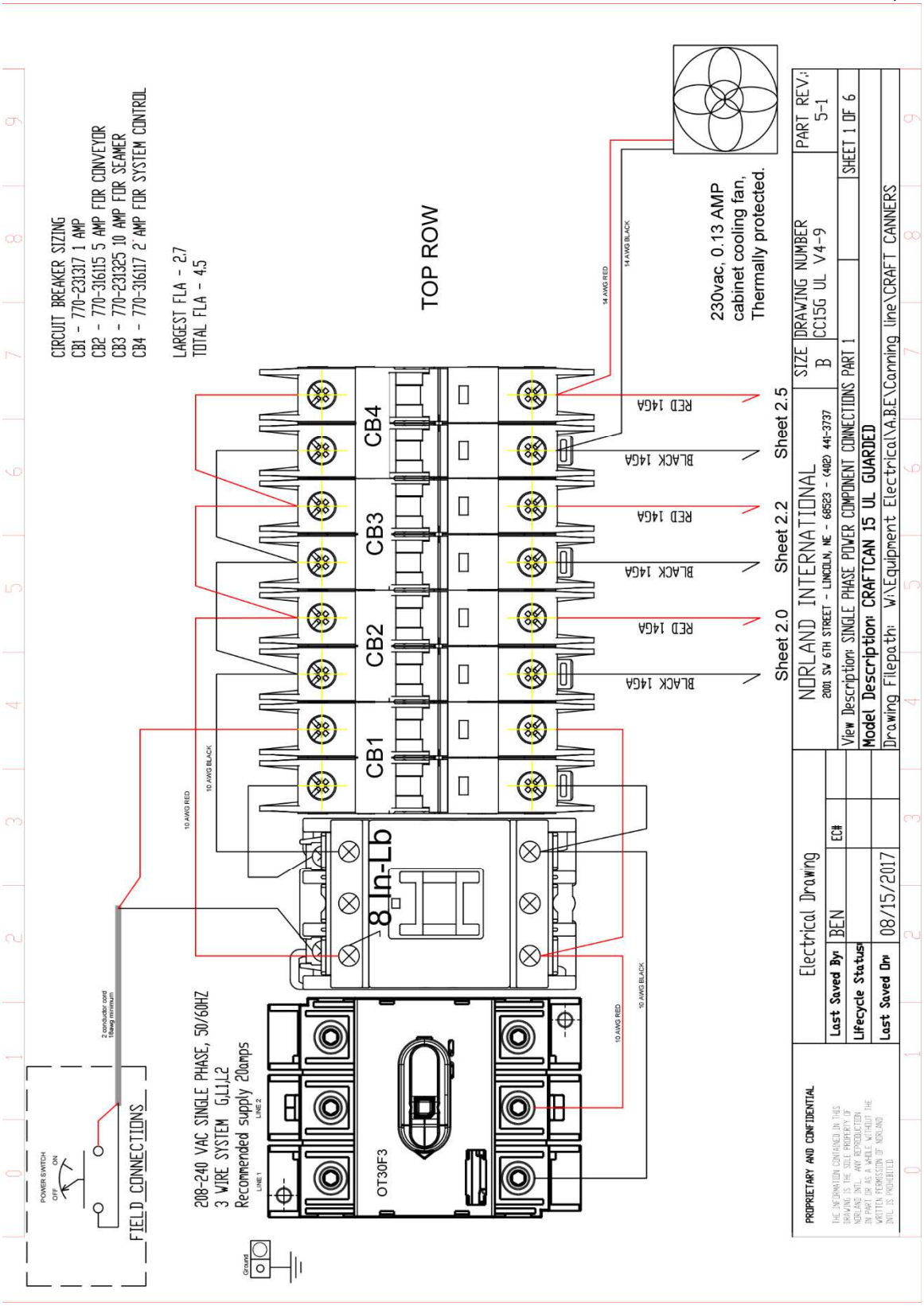
CIRCUIT BREAKER SIZING
CB1 - 770-231317 1 AMP
CB2 - 770-316115 5 AMP FOR CONVEYOR
CB3 - 770-231325 10 AMP FOR SEAMER
CB4 - 770-316117 2 AMP FOR SYSTEM CONTROL
LARGEST FLA - 2.7
TOTAL FLA - 4.5
TOP ROW
230vac, 0.13 AMP cabinet cooling fan, Thermally protected.
CB1
CB2
CB3
CB4
8 In-Lb
OT30F3
208-240 VAC SINGLE PHASE, 50/60HZ
3 WIRE SYSTEM L1,L2
Recommended supply 20amps
LINE 1
LINE 2
Ground
POWER SWITCH
OFF
ON
2 conductor cord
18awg minimum
FIELD CONNECTIONS
10 AWG RED
10 AWG BLACK
14 AWG RED
14 AWG BLACK
RED 14GA
BLACK 14GA
Sheet 2.0
Sheet 2.2
Sheet 2.5
NORLAND INTERNATIONAL
2001 SW 6TH STREET - LINCOLN, NE - 68523 - (402) 441-3737
SIZE B
DRAWING NUMBER CC15G UL V4-9
PART REV.: 5-1
View Description: SINGLE PHASE POWER COMPONENT CONNECTIONS PART 1
SHEET 1 OF 6
Model Description: CRAFTCAN 15 UL GUARDED
Drawing Filepath: W:\Equipment Electrical\A.B.E\Canning line\CRAFT CANNERS
Electrical Drawing
Last Saved By: BEN
EC#
Lifecycle Status:
Last Saved On: 08/15/2017
PROPRIETARY AND CONFIDENTIAL
THE INFORMATION CONTAINED IN THIS DRAWING IS THE SOLE PROPERTY OF NORLAND INTL. ANY REPRODUCTION IN PART OR AS A WHOLE WITHOUT THE WRITTEN PERMISSION OF NORLAND INTL. IS PROHIBITED.

2001 SW 6th St.

Lincoln, NE 68522

402-475-BEER